MAN 1000602417 EN Version: C Status: RL (released | freigegeben) printed: 26.06.2026

Operating Instructions

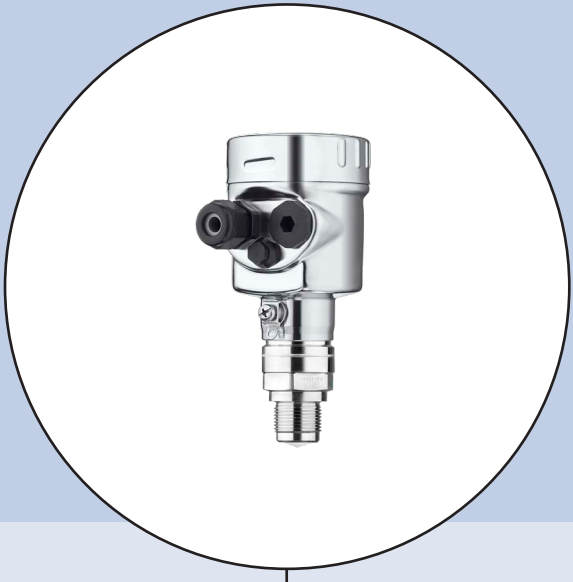

LEVEL TRANSMITTER 8140

Two-wire 4 … 20 mA/HART

bürkert
FLUID CONTROL SYSTEMS

Contents

1 About this document 5
1.1 Function 5
1.2 Target group 5
1.3 Symbols used 5

2 For your safety 6
2.1 Authorised personnel 6
2.2 Intended use 6
2.3 Warning about incorrect use 6
2.4 General safety instructions 6
2.5 Mode of operation - Radar signal 7
2.6 Installation and operation in the USA and Canada 7

3 Product description 8
3.1 Configuration 8
3.2 Principle of operation 9
3.3 Adjustment 10
3.4 Packaging, transport and storage 11
3.5 Accessories 12

4 Setup - the most important steps 13

5 Mounting 14
5.1 General instructions 14
5.2 Housing features 15
5.3 Mounting preparations - Horn antenna 17
5.4 Mounting preparations - mounting strap 18
5.5 Mounting versions - plastic horn antenna 19
5.6 Mounting instructions 21
5.7 Measuring rigs - bypass 40
5.8 Measurement setup - surge pipe 42
5.9 Measurement setup - Flow 45
5.10 Measurement through plastics and glass 47

6 Connecting to power supply 49
6.1 Preparing the connection 49
6.2 Connecting 50
6.3 Wiring plan - single chamber housing 51
6.4 Wiring plan - version IP66/IP68 (1 bar) 52
6.5 Switch-on phase 52

7 Access protection, IT security 53
7.1 Bluetooth radio interface 53
7.2 Protection of the parameterization 53
7.3 IT Security (IEC 62443-4-2) 54

8 Functional safety (SIL) 55
8.1 Objective 55
8.2 SIL qualification 55
8.3 Application area 56
8.4 Safety concept of the parameterization 56
8.5 First setup 57
8.6 Function test 58
8.7 Parameter adaptations after the first setup 60

printed: 26.06.2026 freigegeben) Status: RL (released Version: C MAN 1000602417 EN

9 Set up with the display and adjustment module 61
9.1 Insert display and adjustment module 61
9.2 Adjustment system 61
9.3 Measured value indication - Selection of national language 62
9.4 Parameter adjustment 63
9.5 Save parameter adjustment data 85

10 Set up with Smartphone/tablet 86
10.1 Preparations 86
10.2 Connecting 86
10.3 Parameter adjustment 87

11 Set up with PC/notebook 88
11.1 Preparations (Bluetooth) 88
11.2 Connecting (Bluetooth) 88
11.3 Parameter adjustment 89
11.4 Save parameter adjustment data 90

12 Menu overview 91
12.1 Display and adjustment module 91
12.2 Adjustment app and PACTware/DTM 94
12.3 Special parameters 99

13 Set up with other systems 102
13.1 DD adjustment programs 102
13.2 Field Communicator 375, 475 102

14 Diagnostics and servicing 103
14.1 Maintenance 103
14.2 Measured value and event memory 103
14.3 Asset Management function 104
14.4 Echo curve 108
14.5 Rectify faults 113
14.6 Exchanging the electronics module 117
14.7 Software update 118
14.8 How to proceed if a repair is necessary 118

15 Dismount 119
15.1 Dismounting steps 119
15.2 Disposal 119

16 Certificates, approvals and certifications 120
16.1 Radio licenses 120
16.2 Approvals for Ex areas 120
16.3 Approvals as overfill protection 120
16.4 Food and pharmaceutical certificates 120
16.5 Conformity 120
16.6 NAMUR recommendations 120
16.7 IT Security 121
16.8 Safety Integrity Level (SIL) 121
16.9 Material and test cerfificates 121

17 Supplement 122
17.1 Technical data 122
17.2 Radio astronomy stations 145
17.3 Dimensions 145

MAN 1000602417 EN Version: C Status: RL (released | freigegeben) printed: 26.06.2026

17.4 Licensing information for open source software 160
17.5 Trademark 160

MAN 1000602417 EN Version: C Status: RL (released | freigegeben) printed: 26.06.2026

Editing status: 2026-02-18

MAN 1000602417 EN Version: C Status: RL (released | freigegeben) printed: 26.06.2026

1 About this document

1.1 Function

This instruction provides all the information you need for mounting, connection and setup as well as important instructions for maintenance, fault rectification, safety and the exchange of parts. Please read this information before putting the instrument into operation and keep this manual accessible in the immediate vicinity of the device.

1.2 Target group

This instruction manual is directed to trained personnel. The contents of this manual must be made available to the qualified personnel and implemented.

1.3 Symbols used

Information, note, tip: This symbol indicates helpful additional information and tips for successful work.

Note: This symbol indicates notes to prevent failures, malfunctions, damage to devices or plants.

Caution: Non-observance of the information marked with this symbol may result in personal injury.

Warning: Non-observance of the information marked with this symbol may result in serious or fatal personal injury.

Danger: Non-observance of the information marked with this symbol results in serious or fatal personal injury.

Ex applications
This symbol indicates special instructions for Ex applications.

- **List**
  The dot set in front indicates a list with no implied sequence.

1 **Sequence of actions**
Numbers set in front indicate successive steps in a procedure.

Disposal
This symbol indicates special instructions for disposal.

1026255-EN-260316

MAN 1000602417 EN Version: C Status: RL (released | freigegeben) printed: 26.06.2026

2 For your safety

2.1 Authorised personnel

All operations described in this documentation must be carried out only by trained and authorized personnel.

During work on and with the device, the required personal protective equipment must always be worn.

2.2 Intended use

LEVEL TRANSMITTER 8140 is a sensor for continuous level measurement.

You can find detailed information about the area of application in chapter "*Product description*".

Operational reliability is ensured only if the instrument is properly used according to the specifications in this document as well as possible supplementary instructions.

2.3 Warning about incorrect use

Inappropriate or incorrect use of this product can give rise to application-specific hazards, e.g. vessel overfill through incorrect mounting or adjustment. Damage to property and persons or environmental contamination can result. Also, the protective characteristics of the instrument can be impaired.

2.4 General safety instructions

This is a state-of-the-art instrument complying with all prevailing regulations and directives. The instrument must only be operated in a technically flawless and reliable condition. The operating company is responsible for the trouble-free operation of the instrument. When measuring aggressive or corrosive media that can cause a dangerous situation if the instrument malfunctions, the operating company has to implement suitable measures to make sure the instrument is functioning properly.

The safety instructions in this instructions manual, the national installation standards as well as the valid safety regulations and accident prevention rules must be observed.

For safety and warranty reasons, any invasive work on the device beyond that described in this instructions manual may be carried out only by personnel authorised by us. Arbitrary conversions or modifications are explicitly forbidden. For safety reasons, only the accessory specified by us must be used.

To avoid any danger, the safety approval markings and safety tips on the device must also be observed.

The low transmitting power of the radar sensor is far below the internationally approved limits. No health impairments are to be expected with intended use. The band range of the measuring frequency can be found in chapter "*Technical data*".

1026255-EN-260316

2.5 Mode of operation - Radar signal

Country or region specific settings for the radar signals are determined via the mode. The operating mode must be set in the operating menu via the respective operating tool at the beginning of the setup.

Caution:
Operating the device without selecting the relevant mode constitutes a violation of the regulations of the radio approvals of the respective country or region.

2.6 Installation and operation in the USA and Canada

This information is only valid for USA and Canada. Hence the following text is only available in the English language.

Installations in the US shall comply with the relevant requirements of the National Electrical Code (NEC - NFPA 70) (USA).

Installations in Canada shall comply with the relevant requirements of the Canadian Electrical Code (CEC Part I) (Canada).

A Class 2 power supply unit has to be used for the installation in the USA and Canada.

MAN 1000602417 EN Version: C Status: RL (released | freigegeben) printed: 26.06.2026

1026255-EN-260316

MAN 1000602417 EN Version: C Status: RL (released | freigegeben) printed: 26.06.2026

3 Product description

3.1 Configuration

Scope of delivery

The scope of delivery encompasses:

- Radar sensor, possibly with accessories
  - Disc springs (flange version with encapsulated antenna system)[1)]
  - Hexagon socket wrench (for instruments with swivel holder)
  - Optional accessory
- Information sheet "*PINs and Codes*" (with SIL, IT security, Bluetooth versions) with:
  - Bluetooth access code
  - Device code
- Information sheet "*Access protection*" (with SIL, IT security, Bluetooth versions) with:
  - Bluetooth access code
  - Emergency Bluetooth unlock code
  - Device code
  - Emergency device code
- Documentation
  - Quick setup guide LEVEL TRANSMITTER 8140
  - Instructions for optional instrument components
  - Ex-specific "*Safety instructions*" (with Ex versions)
  - Safety Manual (with SIL version)
  - Radio licenses
  - If necessary, further certificates

Information:
Optional instrument features are also described in this instructions. The respective scope of delivery results from the order specification.

[1)] Use see chapter "Mounting instructions, sealing to the process"

1026255-EN-260316

MAN 1000602417 EN Version: C Status: RL (released | freigegeben) printed: 26.06.2026

Constituent parts

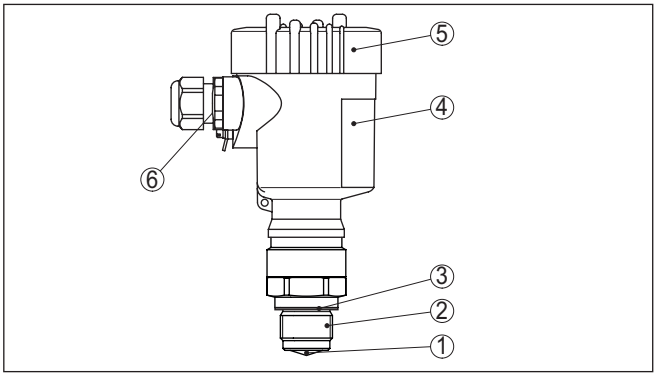

Fig. 1: Components of LEVEL TRANSMITTER 8140

1 Radar antenna
2 Process fitting
3 Process seal
4 Electronics housing
5 Housing cover with optional display and adjustment module
6 Ventilation

Type label

The type label contains the most important data for identification and use of the instrument:

- Instrument type
- Information about approvals
- Configuration information
- Technical data
- Serial number of the instrument
- QR code for device identification
- Numerical code for Bluetooth access (optional)
- Manufacturer information

Documents and software

Further information can be found on our homepage.

There you will find the documentation and further information about the device.

3.2 Principle of operation

Application area

The LEVEL TRANSMITTER 8140 is a radar sensor for continuous level measurement of liquids as well as bulk solids under different process conditions.

Antenna systems

The instrument is available with different antenna systems:

1026255-EN-260316

MAN 1000602417 EN Version: C Status: RL (released | freigegeben) printed: 26.06.2026

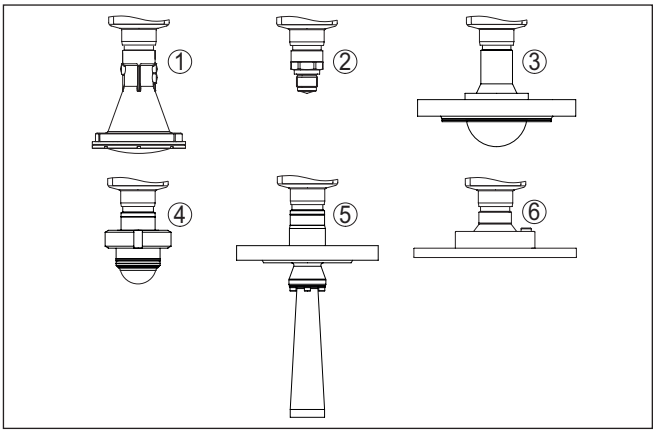

Fig. 2: Antenna systems LEVEL TRANSMITTER 8140

1 Plastic horn antenna
2 Thread with integrated antenna system
3 Flange with encapsulated antenna system
4 Hygienic fitting
5 Horn antenna
6 Flange with lens antenna

Functional principle

The instrument emits a frequency-modulated continuous radar signal (FMCW) through its antenna. The emitted signal is reflected by the medium and received by the antenna as an echo with modified frequency. The frequency change is proportional to the distance and is converted into the level.

Functional principle

The instrument emits a frequency-modulated continuous radar signal (FMCW) through its antenna. The emitted signal is reflected by the medium and received by the antenna as an echo with modified frequency. The frequency change is proportional to the distance and is converted into the level.

3.3 Adjustment

Local adjustment

On-site adjustment of the device is carried out via the integrated display and adjustment unit.

Note:
The housing with display and adjustment unit can be rotated by 360° for optimum readability and operability.

Wireless adjustment

Devices with integrated Bluetooth module can be adjusted wirelessly via standard adjustment tools:

- Smartphone/tablet (iOS or Android operating system)
- PC/notebook (Windows operating system)

1026255-EN-260316

MAN 1000602417 EN Version: C Status: RL (released | freigegeben) printed: 26.06.2026

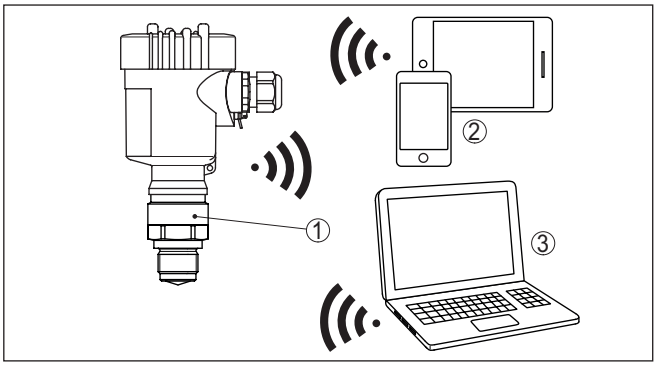

Fig. 3: Wireless connection to standard operating devices with integrated Bluetooth LE

1 Sensor
2 Smartphone/Tablet
3 PC/Notebook

Adjustment via the signal cable

Devices with signal output 4 … 20 mA/HART can also be operated via a signal cable. This is done via an interface adapter and a PC/notebook using DTM/PACTware.

3.4 Packaging, transport and storage

Packaging

Your instrument was protected by packaging during transport. Its capacity to handle normal loads during transport is assured by a test based on ISO 4180.

The packaging consists of environment-friendly, recyclable cardboard. For special versions, PE foam or PE foil is also used. Dispose of the packaging material via specialised recycling companies.

Transport

Transport must be carried out in due consideration of the notes on the transport packaging. Nonobservance of these instructions can cause damage to the device.

Transport inspection

The delivery must be checked for completeness and possible transit damage immediately at receipt. Ascertained transit damage or concealed defects must be appropriately dealt with.

Storage

Up to the time of installation, the packages must be left closed and stored according to the orientation and storage markings on the outside.

Unless otherwise indicated, the packages must be stored only under the following conditions:

- Not in the open
- Dry and dust free
- Not exposed to corrosive media
- Protected against solar radiation
- Avoiding mechanical shock and vibration

1026255-EN-260316

Storage and transport temperature

- Storage and transport temperature see chapter "*Technical data - Ambient conditions*"
- Relative moisture 20 … 85 %

Lifting and carrying

With instrument weights of more than 18 kg (39.68 lbs) suitable and approved equipment must be used for lifting and carrying.

3.5 Accessories

The instructions for the listed accessories can be found in the download area on our homepage.

Display and adjustment module

The display and adjustment module is used for measured value indication, adjustment and diagnosis.

The integrated Bluetooth module (optional) enables wireless adjustment via standard adjustment devices.

MAN 1000602417 EN Version: C Status: RL (released | freigegeben) printed: 26.06.2026

1026255-EN-260316

4 Setup - the most important steps

MAN 1000602 4 EN Version: C Status: RL (released | freigegeben) printed: 26.06.2026

Prepare

What?	How?
Identify sensor	Scan QR code on type label, check sensor data

Mount and connect sensor

Liquids	Bulk solids
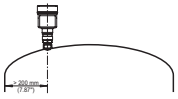	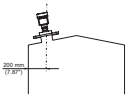

Connection technology	Wiring plan
	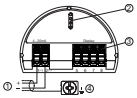

Select adjustment

Display and adjustment module	Adjustment app[2)]

Parameterize sensor

Liquids	Bulk solids
Enter medium type, application, vessel height, adjustment and mode	
	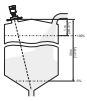

Check measured value

Indicators	Output
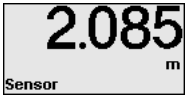	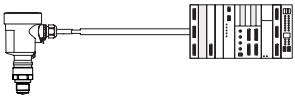

[2)] Download via Apple App Store, Google Play Store, Baidu Store

MAN 1000602417 EN Version: C Status: RL (released | freigegeben) printed: 28.8.2026

5 Mounting

5.1 General instructions

Protection against moisture

Protect your instrument against moisture ingress through the following measures:

- Use a suitable connection cable (see chapter "*Connecting to power supply*")
- Tighten the cable gland or plug connector
- Align the housing so that the cable gland points downwards or to the side
- Lead the connection cable downward in front of the cable entry or plug connector

This applies mainly to outdoor installations, in areas where high humidity is expected (e.g. through cleaning processes) and on cooled or heated vessels.

Note:
Make sure that during installation or maintenance no moisture or dirt can get inside the instrument.

To maintain the housing protection, make sure that the housing lid is closed during operation and locked, if necessary.

Process conditions

Note:
For safety reasons, the instrument must only be operated within the permissible process conditions. You can find detailed information on the process conditions in chapter "*Technical data*" of the operating instructions or on the type label.

Hence make sure before mounting that all parts of the instrument exposed to the process are suitable for the existing process conditions.

These are mainly:

- Active measuring component
- Process fitting
- Process seal

Process conditions in particular are:

- Process pressure
- Process temperature
- Chemical properties of the medium
- Abrasion and mechanical influences

Permissible process pressure (MWP) - Device

The permissible process pressure range is specified on the type label with "MWP" (Maximum Working Pressure). The MWP takes into account the component with the lowest pressure and may be applied permenently. This specification refers to a reference temperature of +20 °C (+68 °F).

In addition, a temperature derating of the process fitting, e. g. with flanges, can limit the permissible process pressure range according to the respective standard.

1026255-EN-260316

MAN 1000602417 EN Version: C Status: RL (released | freigegeben) printed: 06.06.2026

Note:
To prevent damage to the device, a test pressure may only briefly exceed the specified MWP by 1.5 times at reference temperature.

Permissible process pressure (MWP) - Mounting accessory

The permissible process pressure range is stated on the type label. The instrument should only be operated with these pressures if the mounting accessory used also fulfils these values. This should be ensured by suitable flanges, welded sockets, tension rings with Clamp connections, sealings, etc.

Second Line of Defense

As a standard feature, the LEVEL TRANSMITTER 8140 is separate from the process through its plastic antenna encapsulation.

Optionally, the instrument is available with a Second Line of Defense (SLOD), a second process separation. It is located as gas-tight leadthrough between the process component and the electronics. This means additional safety against penetration of the medium fron the process into the instrument.

5.2 Housing features

Filter element

The filter element in the housing is used for ventilation of the housing.

For effective ventilation, the filter element must always be free of deposits. Therefore, mount the device so that the filter element is protected against deposits.

Note:
Do not use a high-pressure cleaner to clean housings in standard types of protection. The filter element could be damaged and moisture could penetrate the housing.

For applications with high-pressure cleaners, the device is available with the appropriate IP69 protection.

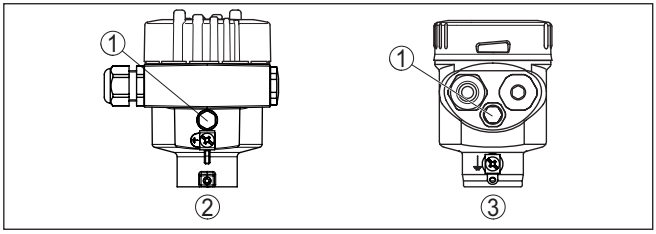

Fig. 4: Position of the filter element depending on housing

1 Filter element
2 Stainless steel single chamber (precision casting)
3 Stainless steel single chamber (electropolished)

Information:
For devices in protection class IP66/IP68 (1 bar), ventilation is provided by a capillary in the fixed cable. In these devices, a blind plug is installed in the housing instead of the filter element.

1026255-EN-260316

MAN 1000602417 EN Version: C Status: RL (released | freigegeben) printed: 26.06.2026

Housing orientation

The housing of LEVEL TRANSMITTER 8140 can be rotated completely by 360°. This enables optimal reading of the display and easy cable entry.

For housings made of electropolished stainless steel, this is done without tools.

With stainless steel precision casting housings, a locking screw must be loosened for turning, see the following illustration:

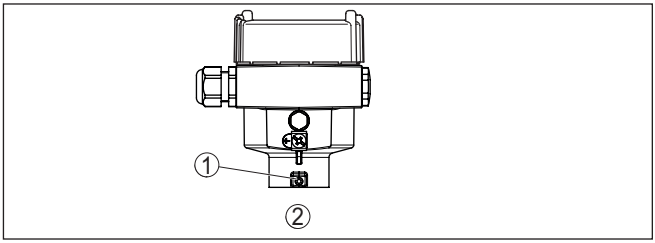

Fig. 5: Position of the locking screw

1 Locking screw
2 Stainless steel housing - precision casting

Proceed as follows:

1. Loosen locking screw (hexagon size 2.5)
2. Turn housing into requested position
3. Re-tighten the locking screw (torque see chapter "*Technical data*").

Note:
By rotating the housing, polarisation changes. For this reason, please also observe the notes on polarisation in chapter "*Mounting instructions*".

Cover catch

With the stainless steel precision casting housing, the housing cover can be secured with a screw. This protects the device against unauthorised opening of the cover.

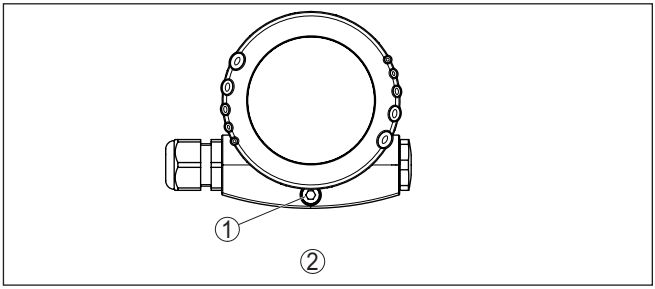

Fig. 6: Position of the screw

1 Safety screw
2 Stainless steel housing - precision casting

Proceed as follows to secure the cover:

1. Screw the housing cover on tightly by hand
2. Unscrew the locking screw from the cover up to the stop using a size 4 hexagonal spanner
3. Check if the cover can no longer be turned

The housing cover is unlocked in the opposite way.

Note:
The locking screw has two holes drilled through the head. Thus it can also be sealed.

5.3 Mounting preparations - Horn antenna

Depending on the device version, the horn antenna may have a larger diameter than the process fitting (e.g. flange). In this case, the antenna must be removed before installation.

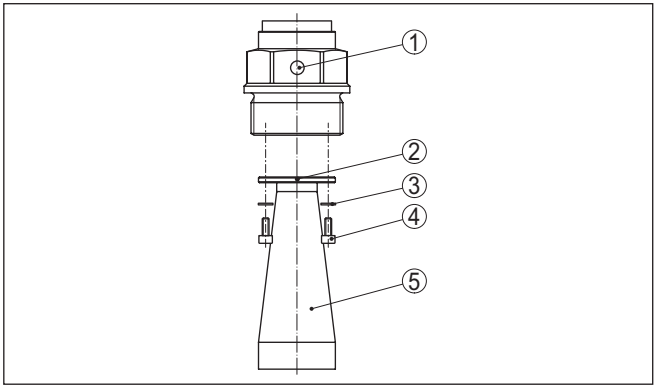

Fig. 7: Configuration - horn antenna (example)

1 Marking on the process fitting
2 Marking at the antenna socket
3 Screw locking device
4 Hexagon socket screws
5 Antenna

Proceed as follows:

1. Loosen the screws (4) on the antenna socket using an Allen key (size 3)
2. Remove the antenna (5)

Note:
Do not pull the plastic cone out of the antenna socket.

3. Insert the antenna from below into the vessel socket and secure it against falling off
4. Fix the antenna to the antenna socket with the screws including untwist guards, max. torque see "*Technical data*"

MAN 1000602417 EN Version: C Status: RL (released | freigegeben) printed: 26.06.2026

1026255-EN-260316

MAN 1000602417 EN Version: C Status: RL (released | freigegeben) printed: 26.06.2026

Note:
The radar sensor with rinsing air connection or antenna extension has a notch on the antenna socket for polarization. This marking must be aligned with the marking on the process fitting.

Caution:
The antenna can only be held securely in place with untwist guards. The untwist guards used at the factory must be reused.

5.4 Mounting preparations - mounting strap

The mounting strap is supplied unassembled (optionally) and must be screwed to the sensor before setup with three hexagon socket screws M5 x 10 and spring washers. Max. torque, see chapter "*Technical data*". Required tools: Allen wrench size 4.

There are two different versions of screwing the strap to the sensor, see following illustration:

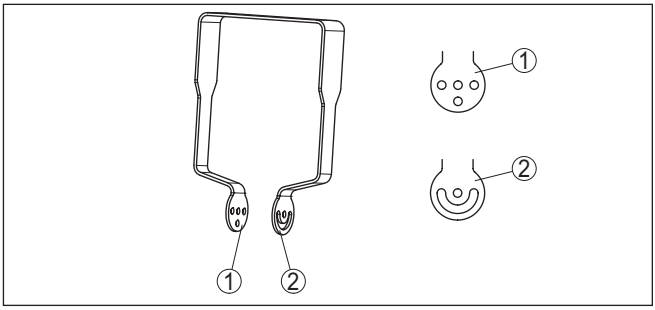

Fig. 8: Mounting strap for screwing to the sensor

1 For angle of inclination in steps
2 For angle of inclination, infinitely variable

The sensor can be swivelled in the bracket as follows:

- Angle of inclination in three steps 0°, 90° and 180°
- Angle of inclination 180°, infinitely variable

1026255-EN-260316

MAN 1000060417 EN Version: C Status: RL (released | freigegeben) printed: 26.06.2026

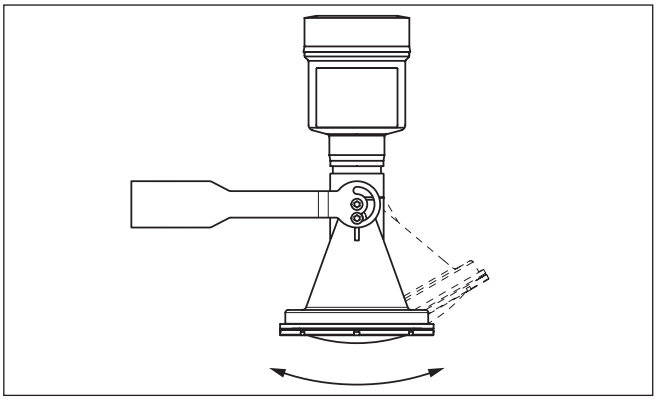

Fig. 9: Adjustment of the inclination when mounted horizontally on the wall

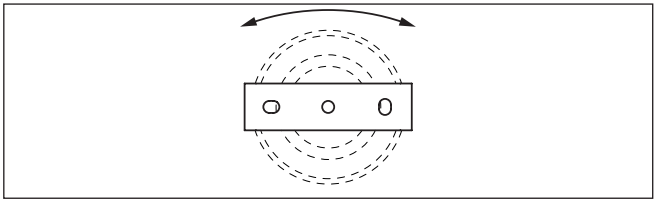

Fig. 10: Rotate when mounted vertically on the ceiling

5.5 Mounting versions - plastic horn antenna

Mounting strap

The optional mounting strap allows simple mounting of the instrument on a wall, ceiling or boom. Especially in the case of open vessels, this is a simple and effective way to align the sensor to the surface of the bulk solid material.

The following versions are available:

- Length 300 mm
- Length 170 mm

Note:
For safe operation of the device, stable, permanent mounting on a load-bearing surface (concrete, wood, steel, etc.) is required. Take this into account when choosing the installation location and use suitable fastening materials (screws, dowels, pipe clamps, etc.).

Mounting strap - Ceiling mounting

The instrument is normally mounted vertically with a bracket on the ceiling.

This allows swivelling the sensor up to 180° for optimal orientation and rotating for optimal connection.

1026255-EN-260316

MAN 1000602417 EN Version: C Status: RG (released | freigegeben) printed: 26.06.2026

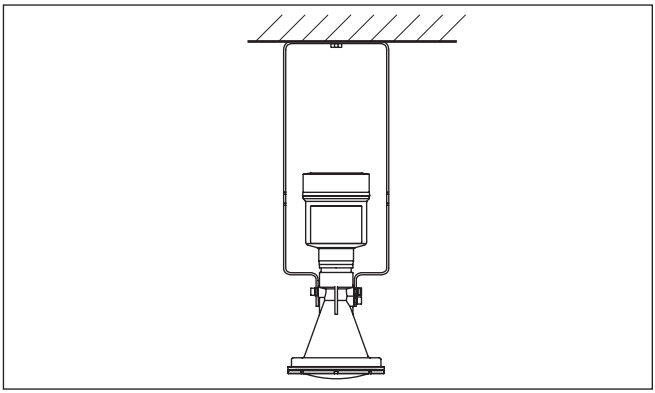

Fig. 11: Ceiling mounting via the mounting strap with length 300 mm

Mounting strap - Wall mounting

As an alternative the strap mounting is carried out horizontally or obliquely.

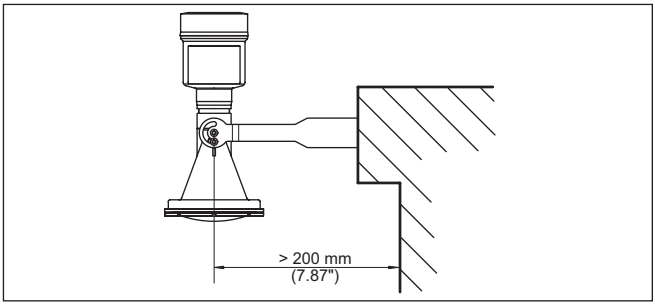

Fig. 12: Wall mounting horizontally via the mounting strap with length 170 mm

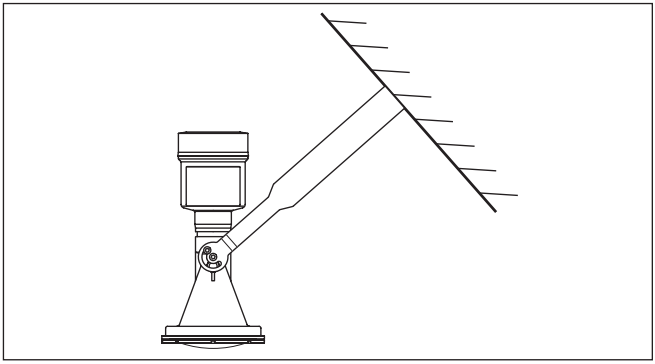

Fig. 13: Wall mounting with inclined wall via the mounting strap with length 300 mm

Flange

Two versions are available for mounting the instrument on a nozzle:

MAN 1000602417 EN Version: C Status: RL (released | freigegeben) printed: 26.06.2026

- Combi compression flange
- Adapter flange

Combi compression flange:
The retrofittable combination compression flange fits DN 80, ASME 3" and JIS 80 vessel flanges. It is not sealed with respect to the radar sensor and can therefore only be used unpressurised.

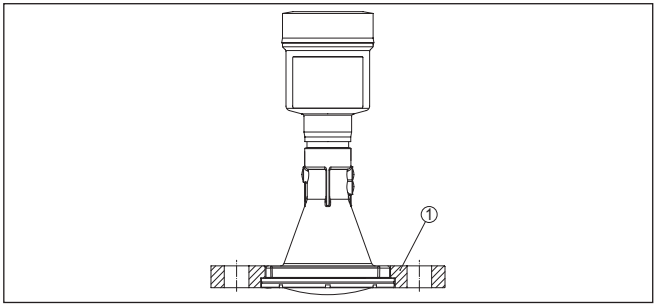

Fig. 14: Combi compression flange

1 Combi compression flange

Adapter flange:
The adapter flange is available from DN 100, ASME 3" and JIS 100. It is permanently connected with the radar sensor and sealed.

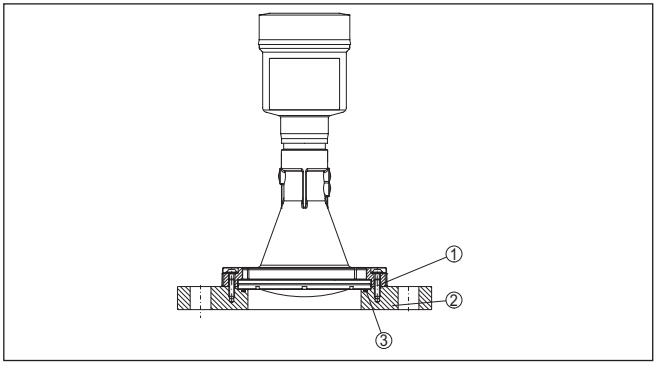

Fig. 15: Adapter flange

1 Connection screw
2 Adapter flange
3 Process seal

5.6 Mounting instructions

Polarisation

Radar sensors for level measurement emit electromagnetic waves. The polarisation is the direction of the electrical share of these waves. It is identifiable by a mark on the housing, see the following drawing:

1026255-EN-260316

MAN 1000602417 EN Version: C Status: RL (released | freigegeben) printed: 26.06.2026

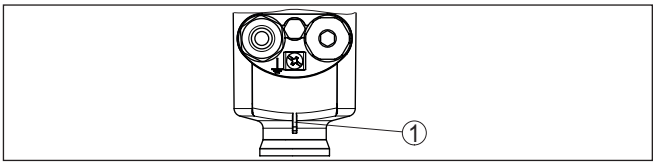

Fig. 16: Position of the polarisation

1 Nose for marking the direction of polarisation

Turning the housing changes the polarisation and thus also the effect of false echoes on the measured value.

Note:
Therefore, pay attention to the position of the polarisation when mounting or when making subsequent changes. Fix the housing to prevent a change in the metrological properties (see chapter "*Housing features*").

Measuring spot

Radar sensors emit their measurement signal in the form of a beam. Depending on the distance and antenna size (beam angle), a measuring spot of different size results, which can be represented approximately as a circle. It should be noted that installations outside the calculated measuring spot can also generate reflections, as this merely represents the area of the highest energy density of the radar signal.

Presentation	Distance	Diameter of the measuring spot depending on the antenna size (beam angle)		
		G¾, ¾ NPT (14°)	G1½, 1½ NPT (8°)	80 mm, 3" (3°)
	1 m	0.25 m	0.12 m	0.1 m
	2 m	0.5 m	0.25 m	0.1 m
	3 m	0.75 m	0.4 m	0.15 m
	5 m	1.2 m	0.6 m	0.25 m
	8 m	2 m	1 m	0.4 m
	10 m	2.4 m	1.2 m	0.5 m
	20 m	4.8 m	2.4 m	1 m
	30 m	7.3 m	3.6 m	1.5 m

Mounting position - liquids

When mounting the device, keep a distance of at least 200 mm (7.874 in) from the vessel wall. If the device is installed in the center of dished or round vessel tops, multiple echoes can arise. However, these can be suppressed by an appropriate adjustment (see chapter "*Setup*").

1026255-EN-260316

MAN 1000602417 EN Version: C Status: RL (released | freigegeben) printed: 26.06.2026

Note:
If you cannot maintain this distance, you should carry out a false signal suppression during setup. This applies especially if buildup on the vessel wall is to be expected.[3)]

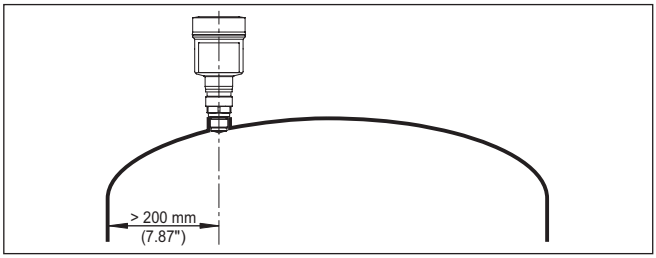

Fig. 17: Mounting of the radar sensor on round vessel tops

In vessels with conical bottom it can be advantageous to mount the device in the centre of the vessel, as measurement is then possible down to the bottom.

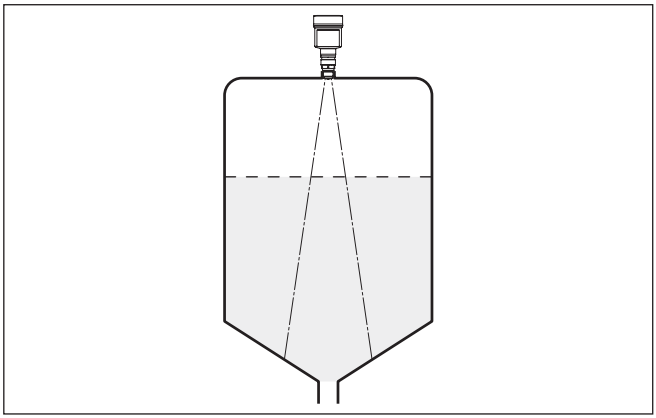

Fig. 18: Mounting of the radar sensor on vessels with conical bottom

Mounting position - bulk solids

Mount the instrument at least 200 mm (7.874 in) away from the vessel wall.

[3)] In this case, it is recommended to repeat the false signal suppression at a later time with existing buildup.

MAN 1000602417 EN Version: C Status: RE (released | freigegeben) printed: 26.06.2026

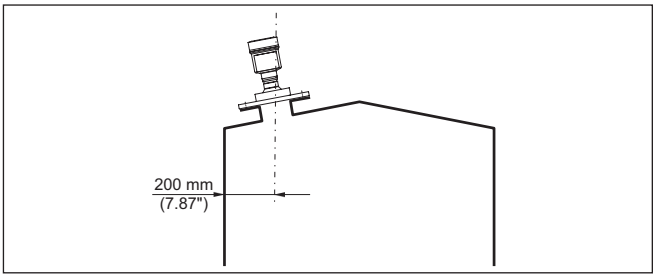

Fig. 19: Mounting the radar sensor on the vessel top

Note:
If you cannot maintain this distance, you should carry out a false signal suppression during setup. This applies especially if buildup on the vessel wall is to be expected.[4)]

Reference plane

The measuring range of LEVEL TRANSMITTER 8140 begins physically at the antenna tip. However, the min/max adjustment begins mathematically with the reference plane, which varies depending on the sensor version.

Plastic horn antenna:
The reference plane is the sealing surface on the lower side.

Thread with integrated antenna system:
The reference plane is the sealing surface at the bottom of the hexagon.

Flange with encapsulated antenna system:
The reference plane is the lower side of the flange plating.

Hygienic fitting:
The reference plane at the O-ring is on the front edge of the antenna.

Horn antenna:
The reference plane is the seal surface on the hexagon or the lower side of the flange.

Flange with lens antenna:
The reference plane is the lower side of the flange.

The following graphic shows the position of the reference plane with different sensor versions.

[4)] In this case, it is recommended to repeat the false signal suppression at a later time with existing buildup.

1026255-EN-260316

MAN 1000602411 EN Version: C Status: RL (released | freigegeben) printed: 26.06.2026

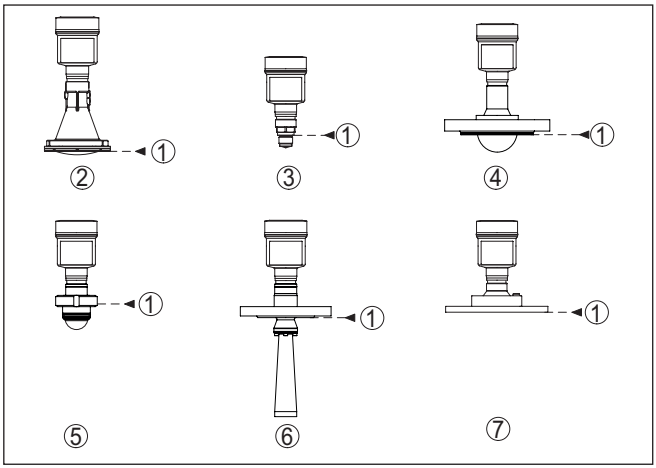

Fig. 20: Position of the reference plane

1 Reference plane
2 Plastic horn antenna
3 Threaded fitting
4 Flange connection
5 Hygienic fitting
6 Horn antenna
7 Flange with lens antenna

Inflowing medium - liquids

Do not mount the instrument in or above the filling stream. Make sure that you detect the medium surface, not the inflowing product.

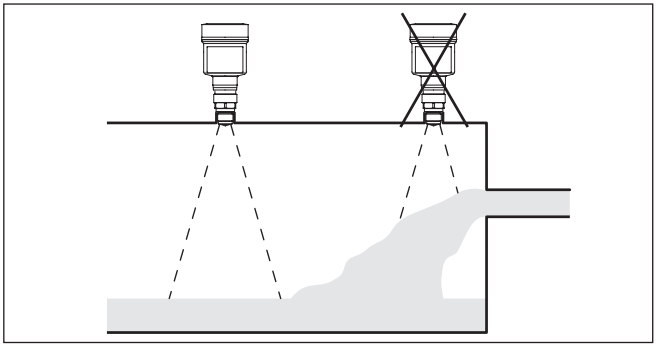

Fig. 21: Mounting of the radar sensor with inflowing medium

Inflowing medium - bulk solids

As a general rule, the device must not be mounted too close to or above the inflowing medium, otherwise the radar signal could be disturbed.

1026255-EN-260316

MAN 1000602417 EN Version: C Status: RL (released | freigegeben) printed: 26.06.2026

Silo with filling from top:
The optimal mounting position is opposite the filling aperture. To avoid heavy soiling of the antenna, the distance to any filter or dust exhauster should be as large as possible.

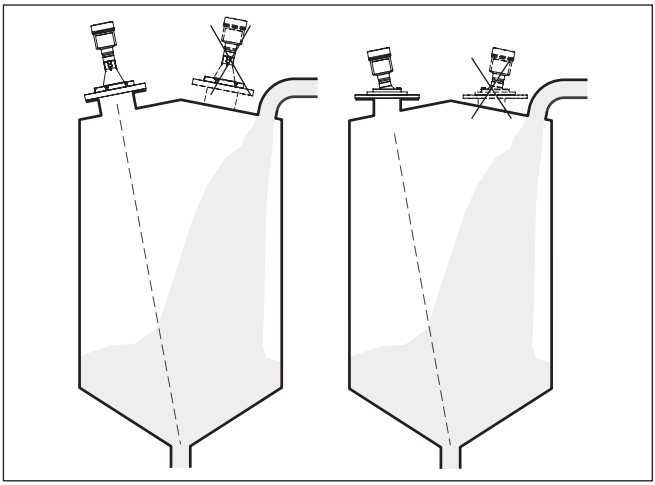

Fig. 22: Mounting the radar sensor when filling from above

Silo with lateral filling:
The optimal mounting position is next to the filling. To avoid heavy soiling of the antenna, the distance to any filter or dust exhauster should be as large as possible.

1026255-EN-260316

MAN 1000002417 EN Version: C Status: RL (released | freigegeben) printed: 26.06.2026

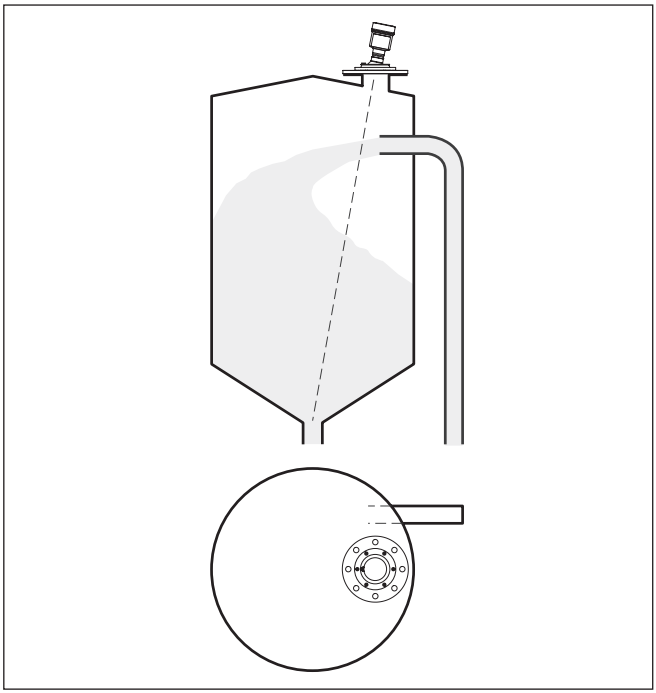

Fig. 23: Mounting the radar sensor with lateral filling

Socket mounting - short nozzles

For nozzle mounting, the nozzle should be as short as possible and its end rounded. This reduces false reflections from the nozzle.

With threaded connection, the antenna end should protrude at least 5 mm (0.2 in) out of the nozzle.

1026255-EN-260316

MAN 1000602 EN Version: C Status: RL (released | freigegeben) printed: 26.06.2026

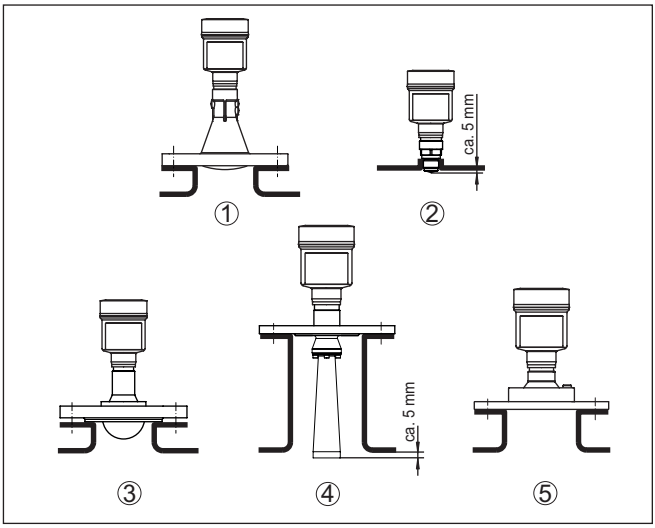

Fig. 24: Recommended pipe socket mounting depending on the version

1 Plastic horn antenna
2 Thread with integrated antenna system
3 Flange with encapsulated antenna system
4 Horn antenna
5 Flange with lens antenna

Socket mounting - longer nozzles

If the reflective properties of the medium are good, you can mount LEVEL TRANSMITTER 8140 on sockets longer than the antenna. The socket end should be smooth and burr-free, if possible also rounded.

Note:
When mounting on a longer socket piece, we recommend to carry out a false signal suppression (see chapter "*Parameter adjustment*"). This adapts the device to the metrological properties of the socket.

You will find recommended values for socket heights in the following illustration or the tables. The values come from typical applications. Deviating from the proposed dimensions, also longer sockets are possible, however the local conditions must be taken into account.

1026255-EN-260316

MAN 1000602417 EN Version: C Status: RL (released | freigegeben) printed: 26.06.2026

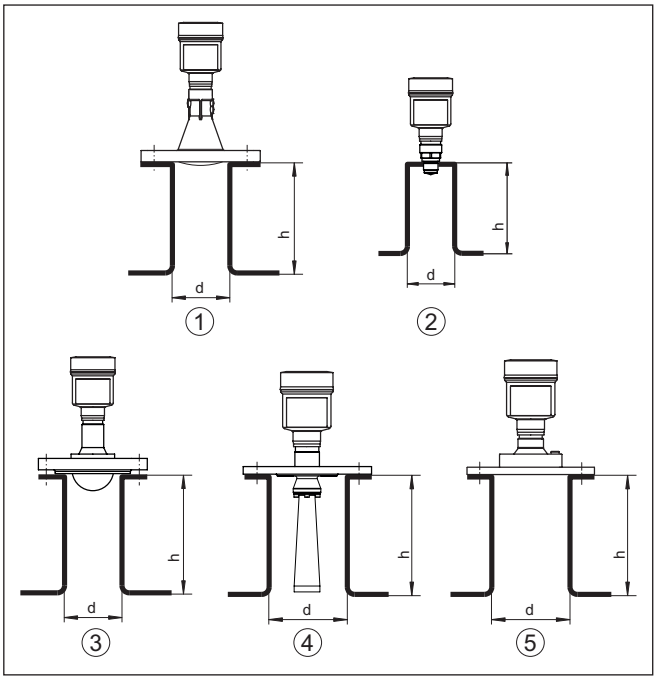

Fig. 25: Socket mounting with deviating socket dimensions

1 Plastic horn antenna
2 Thread with integrated antenna system
3 Flange with encapsulated antenna system
4 Horn antenna
5 Flange with lens antenna

Plastic horn antenna

Socket diameter "d"		Socket length "h"	
80 mm	3"	≤ 400 mm	≤ 15.8 in
100 mm	4"	≤ 500 mm	≤ 19.7 in
150 mm	6"	≤ 800 mm	≤ 31.5 in

Thread with integrated antenna system

Socket diameter "d"		Socket length "h"	
40 mm	1½"	≤ 150 mm	≤ 5.9 in
50 mm	2"	≤ 200 mm	≤ 7.9 in
80 mm	3"	≤ 300 mm	≤ 11.8 in
100 mm	4"	≤ 400 mm	≤ 15.8 in
150 mm	6"	≤ 600 mm	≤ 23.6 in

1026255-EN-260316

MAN 1000602417 EN Version: C Status: RL (released | freigegeben) printed: 26.06.2026

Flange with encapsulated antenna system

Socket diameter "d"		Socket length "h"	
50 mm	2"	≤ 200 mm	≤ 7.9 in
80 mm	3"	≤ 400 mm	≤ 15.8 in
100 mm	4"	≤ 500 mm	≤ 19.7 in
150 mm	6"	≤ 800 mm	≤ 31.5 in

Horn antenna

Socket diameter "d"		Socket length "h"		Recommended antenna diameter	
40 mm	1½"	≤ 100 mm	≤ 3.9 in	40 mm	1½"
50 mm	2"	≤ 150 mm	≤ 5.9 in	48 mm	2"
80 mm	3"	≤ 300 mm	≤ 11.8 in	75 mm	3"

Flange with lens antenna

Socket diameter "d"		Socket length "h"	
100 mm	4"	≤ 500 mm	≤ 19.7 in
150 mm	6"	≤ 800 mm	≤ 31.5 in

Sealing to the process

The device is also available with flange and encapsulated antenna system. In this version, the PTFE washer of the antenna encapsulation is also the process seal.

Note:
No additional process seal is required in addition to the PTFE seal. However, in very rare cases where an additional seal is required, it must be made of a softer material than PTFE. Otherwise, the PTFE washer will deform and may damage the device.

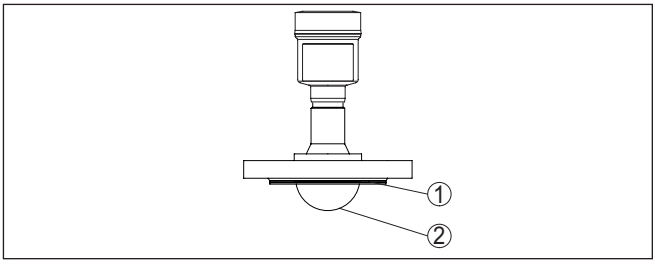

Fig. 26: LEVEL TRANSMITTER 8140 with flange and encapsulated antenna system

1 PTFE washer
2 Antenna encapsulation

1026255-EN-260316

MAN 1000602511 EN Version: C Status: RL (released | freigegeben) printed: 26.06.2026

Note:
PTFE-plated flanges, however, have a preload loss over time with large temperature changes. This can negatively the sealing properties.

To avoid this, use the disc springs from the scope of delivery during mounting. They fit the required flange screws.

Proceed as follows to seal effectively:

1. Use flange screws according to the number of flange holes
2. Insert the disc springs as described above

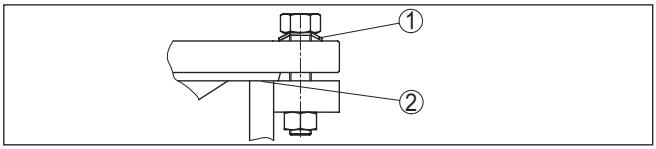

Fig. 27: Use of disc springs

1 Disc spring
2 Sealing surface

3. Tighten screws with the necessary torque (see chapter "*Technical data*", "*Torques*")

Note:
We recommend retightening the screws at regular intervals depending on the process pressure and temperature. This will maintain the sealing properties of the antenna encapsulation against the process.

Mounting - PTFE threaded adapter

PTFE threaded adapters are available for LEVEL TRANSMITTER 8140 with thread G1½ resp. 1½ NPT. Due to this, only PTFE is in contact with the medium.

1026255-EN-260316

MAN 1000602417 EN Version: C Status: RL (released | freigegeben) printed: 26.06.2026

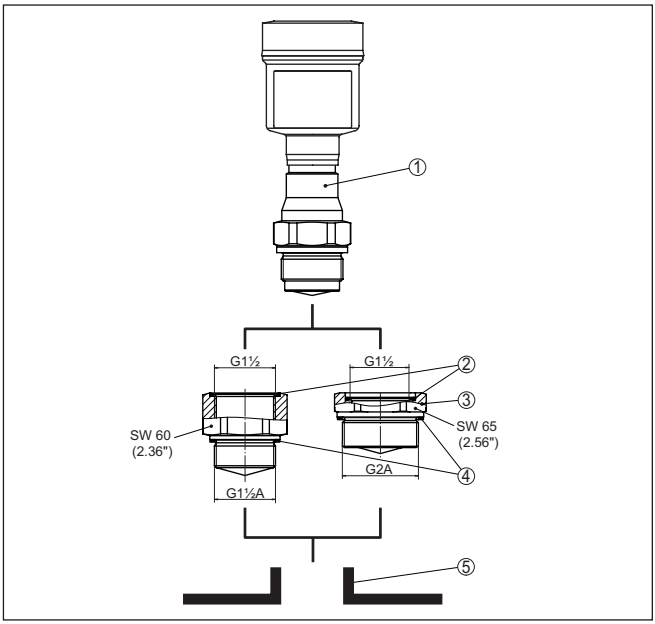

Fig. 28: PTFE threaded adapter (example: with thread G1½)

1 Sensor
2 O-ring seal (sensor side)
3 PTFE threaded adapter
4 Flat seal (process side)
5 Welded socket

Proceed as follows to mount the PTFE adapter:

1. Remove existing Klingersil flat seal on the thread of the device

Information:
With the adapter in NPT version, the Klingersil flat seal is omitted.

2. Insert the supplied O-ring seal (1) into the threaded adapter on the sensor side
3. Place the supplied flat seal (4) on the process side onto the thread of the adapter

Information:
With the adapter in NPT version, the Klingersil flat seal on the process side is omitted.

4. Screw the threaded adapter on the hexagon into the welded socket. Torque see chapter "*Technical data*", "*Torques*".
5. Screw the sensor on the hexagon into the threaded adapter. Torque see chapter "*Technical data*", "*Torques*".

Mounting in the vessel insulation

Instruments for a temperature range from 200 °C have a spacer for temperature decoupling. It is located between process fitting and electronics housing.

1026255-EN-260316

MAN 1000602417 EN Version: C Status: RL (released | freigegeben) printed: 26.06.2026

Note:
Incorrect installation of the device can render this temperature decoupling ineffective. Damage to the electronics can be the result.

Hence ensure effective temperature decoupling. Include the spacer in the vessel insulation only up to max. 40 mm, see the following figure.

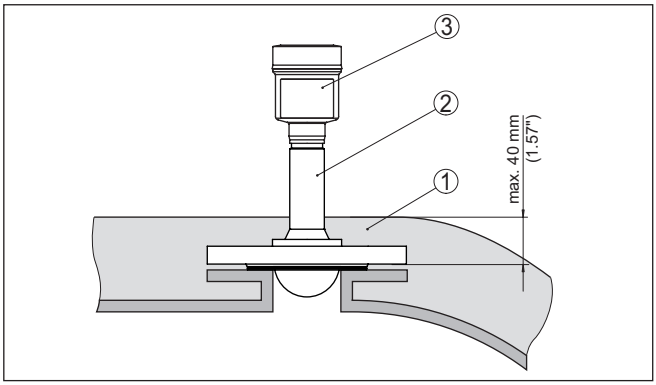

Fig. 29: Mounting the instrument on insulated vessels

1 Vessel insulation
2 Distance piece for temperature decoupling
3 Electronics housing

Vessel installations

The mounting location of the radar sensor should be a place where no other equipment or fixtures cross the path of the radar signals.

Vessel installations, such as e.g. ladders, limit switches, heating spirals, struts, etc., can cause false echoes and impair the useful echo. Make sure when planning your measuring point that the radar sensor has a "*clear view*" to the measured product.

In case of existing vessel installations, a false signal suppression should be carried out during setup.

If large vessel installations such as struts or supports cause false echoes, these can be attenuated through supplementary measures. Small, inclined sheet metal baffles above the installations "*scatter*" the radar signals and prevent direct interfering reflections.

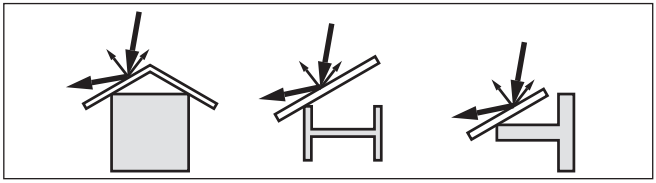

Fig. 30: Cover flat, large-area profiles with deflectors

Alignment - Liquids

In liquids, direct the device as perpendicular as possible to the medium surface to achieve optimum measurement results.

1026255-EN-260316

MAN 1000602417 EN Version: C Status: RL (released | freigegeben) printed: 26.06.2026

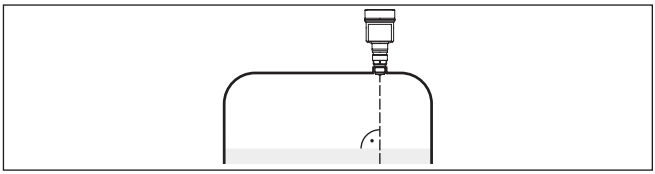

Fig. 31: Alignment in liquids

Orientation - Bulk solids

In a cylindrical silo with conical outlet, the mounting is carried out on a third up to the half of the vessel radius from outside (see following drawing).

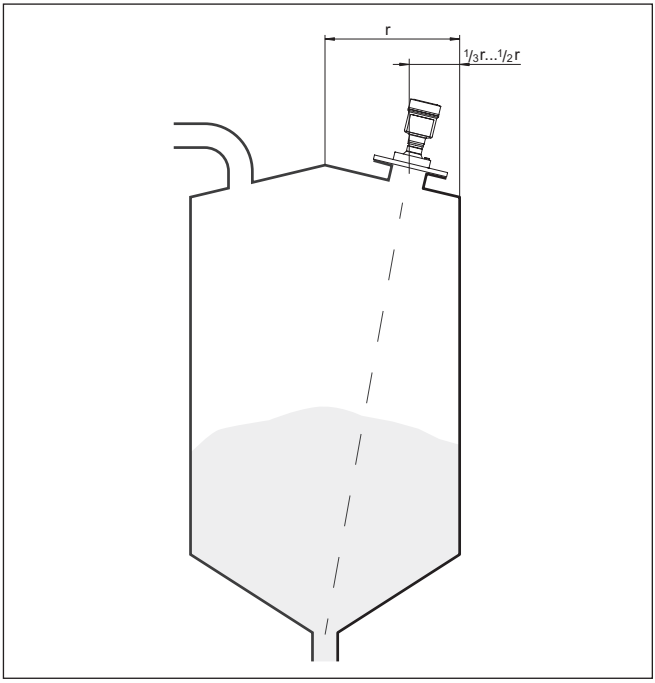

Fig. 32: Mounting position and orientation

Direct the device in such a way that the radar signal reaches the lowest vessel level. Hence it is possible to detect the complete vessel volume.

Tip:
The easiest way to align the device is with the optional swivelling holder. Determine the suitable inclination angle and check the alignment with the alignment aid in the adjustment app on the device.

Alternatively, the angle of inclination can be determined using the following drawing and table. It depends on the measuring distance "d" and the distance "a" between vessel centre and mounting position.

MAN 1000602417 EN Version: C Status: RL (released | freigegeben) printed: 26.06.2026

Check the alignment with a suitable level or water level.

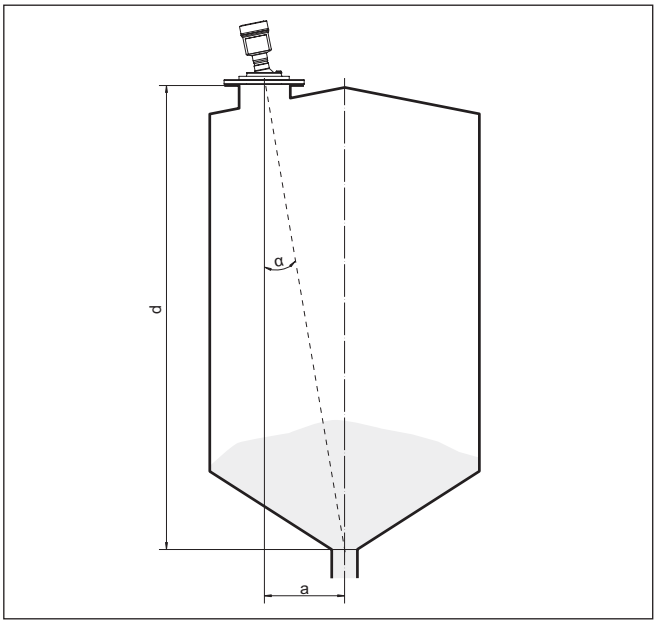

Fig. 33: Determination of the angle of inclination for alignment of LEVEL TRANSMITTER 8140

Distance d (m)	2°	4°	6°	8°	10°
2	0.1	0.1	0.2	0.3	0.4
4	0.1	0.3	0.4	0.6	0.7
6	0.2	0.4	0.6	0.8	1.1
8	0.3	0.6	0.8	1.1	1.4
10	0.3	0.7	1.1	1.4	1.8
15	0.5	1	1.6	2.1	2.6
20	0.7	1.4	2.1	2.8	3.5
25	0.9	1.7	2.6	3.5	4.4
30	1	2.1	3.2	4.2	5.3
35	1.2	2.4	3.7	4.9	6.2
40	1.4	2.8	4.2	5.6	7.1
45	1.6	3.1	4.7	6.3	7.9
50	1.7	3.5	5.3	7	8.8
60	2.1	4.2	6.3	8.4	10.5
70	2.4	4.9	7.3	9.7	12.2
80	2.8	5.6	8.4	11.1	13.9
90	3.1	6.3	9.4	12.5	15.6

MAN 1000602417 EN Version: C Status: RL (released | freigegeben) printed: 26.06.2026

Distance d (m)	2°	4°	6°	8°	10°
100	3.5	7	10.5	13.9	17.4
110	3.8	7.7	11.5	15.3	19.1
120	4.2	8.4	12.5	16.7	20.8

Example:
In a vessel 20 m high, the installation position of the device is 1.4 m from the vessel centre.

The necessary angle of inclination of 4° can be read out from this table.

Proceed as follows to adjust the angle of inclination with the swivelling holder:

1. Loosen the terminal screws of the swivel holder by one turn. Use a hexagon socket wrench, size 5.

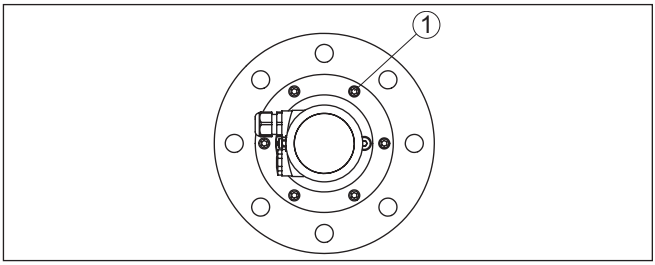

Fig. 34: LEVEL TRANSMITTER 8140 with swivelling holder

1 Terminal screws (6 pieces)

2. Align the device, check angle of inclination

Note:
The max. angle of inclination of the swivelling holder is approx. 10°

3. Re-tighten the terminal screws, max. torque see chapter "*Technical data*".

Agitators

Agitators in the vessel can reflect the measurement signal and thus lead to undesired incorrect measurements.

Note:
To avoid this, a false signal suppression should be carried out with the agitators in motion. This ensures that the interfering reflections from the agitators are saved with the blades in different positions.

1026255-EN-260316

MAN 1000602417 EN Version: C Status: RL (released | freigegeben) printed: 26.06.2026

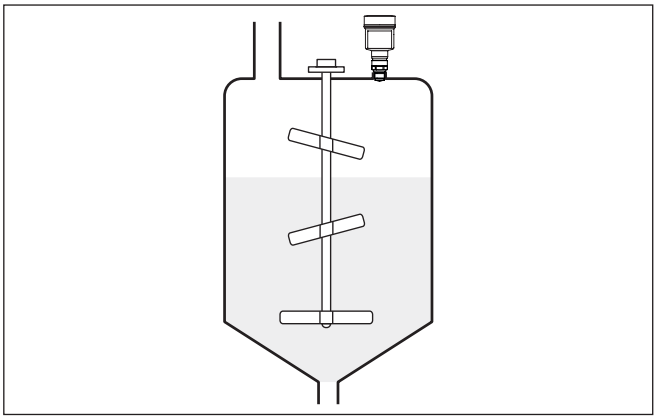

Fig. 35: Agitators

Foam generation

Through the action of filling, stirring and other processes in the vessel, compact foams which considerably damp the emitted signals may form on the medium surface.

Note:
If foams lead to measurement errors, you should use the biggest possible radar antennas or as an alternative, sensors with guided radar.

Material heaps

Large material heaps are best measured with several instruments, which can be mounted on e.g. traverse cranes. For this type of application it is advantageous to orient the sensor perpendicular to the bulk solid surface.

The sensors do not influence each other.

Information:
In these applications, it must be taken into account that the radar sensors are designed for relatively slow level changes. Therefore, when using on moving parts, observe the measurement characteristics of the device (see chapter "*Technical data*").

1026255-EN-260316

MAN 1000602417 EN Version: C Status: RELEASED | freigegeben) printed: 26.06.2026

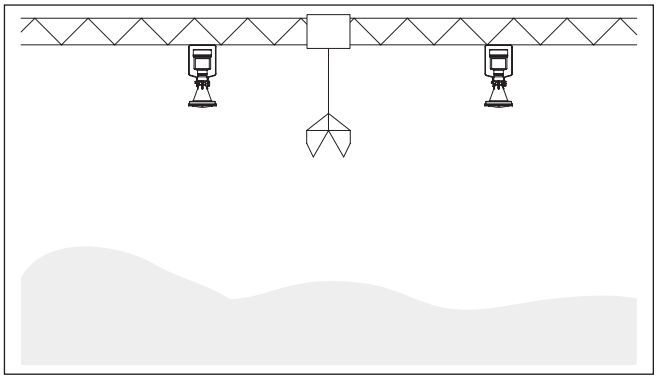

Fig. 36: Radar sensors on traverse crane

Mounting in multiple chamber silo

The separating walls in multi-chamber silos are often constructed from trapezoidal sheets to ensure the required stability.

Note:
If the radar sensor is mounted too close to such a separating wall, considerable interfering reflections may occur. To avoid this, the sensor should be installed at the greatest possible distance from the separating walls.

The optimal installation of the device is therefore on the outer wall of the silo. The sensor should be directed towards the emptying point in the centre of the silo. This can be done, for example, using the mounting strap.

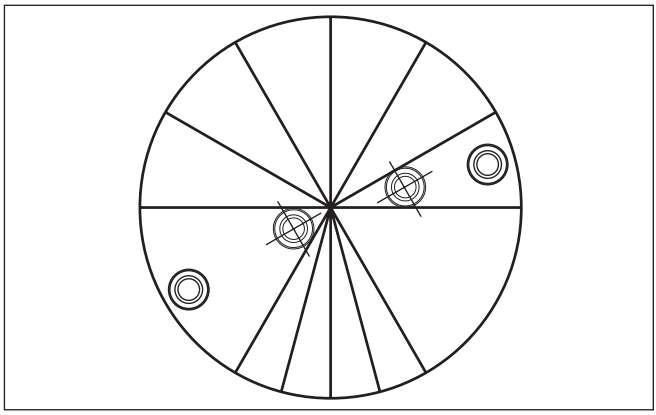

Fig. 37: Installation and orientation in multiple chamber silos

MAN 1000602417 EN Version: C Status: RL (released | freigegeben) printed: 26.06.2026

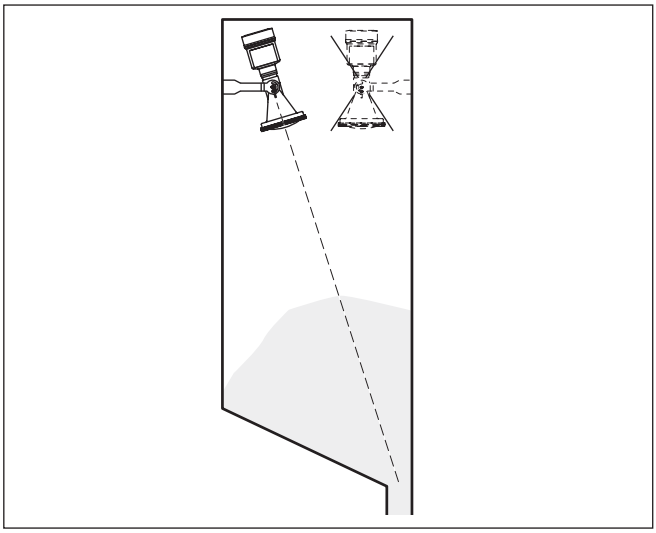

Fig. 38: Installation and orientation in multiple chamber silos

Dust deposits - Rinsing air connection

To avoid heavy buildup and dust on the antenna, the device should not be mounted close to the dust exhauster inside the vessel.

To protect the device against buildup, particularly in case of strong condensation, air rinsing is recommended.

Plastic horn antenna and flange with horn antenna

The LEVEL TRANSMITTER 8140 with plastic horn antenna or flange with horn antenna is optionally available with a purging air connection. The design of the LEVEL TRANSMITTER 8140 with plastic horn antenna differs depending on the flange version, see the following diagrams.

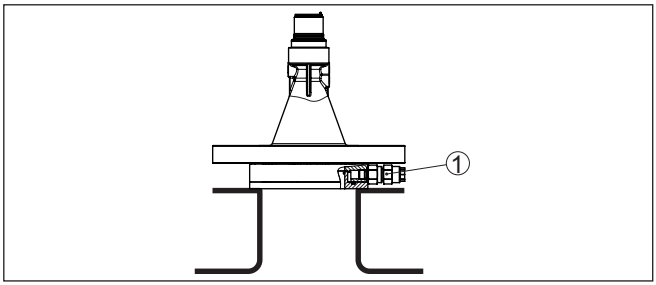

Fig. 39: Plastic horn antenna with compression flange

1 Rinsing air connection

1026255-EN-260316

MAN 1000602744 EN Version: C Status: RL (released | freigegeben) printed: 26.06.2026

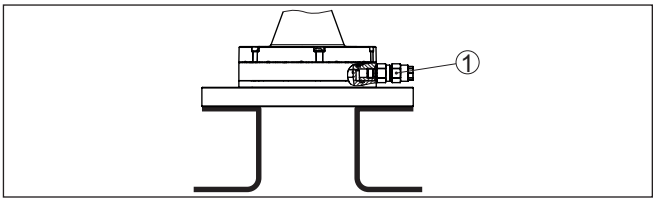

Fig. 40: Plastic horn antenna with adapter flange

1 Rinsing air connection

Flange with lens antenna

The LEVEL TRANSMITTER 8140 with metal-jacketed lens antenna is equipped with a rinsing air connection as a standard feature, see following graphics.

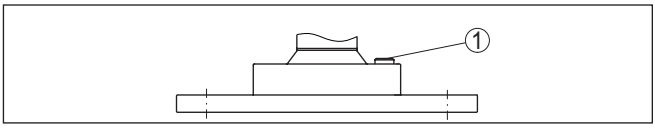

Fig. 41: Metal-jacketed lens antenna

1 Rinsing air connection

You can find details on the rinsing air connection in chapter "*Technical data*".

5.7 Measuring rigs - bypass

Measurement in the bypass tube

A bypass consists of a standpipe with lateral process fittings. It is attached to the outside of a container as a communicating vessel.

The LEVEL TRANSMITTER 8140 with 80 GHz technology is suitable as standard for non-contact level measurement in a bypass.

1026255-EN-260316

MAN 1000602417 EN Version: C Status: RL (released | freigegeben) printed: 26.06.2026

Configuration - bypass

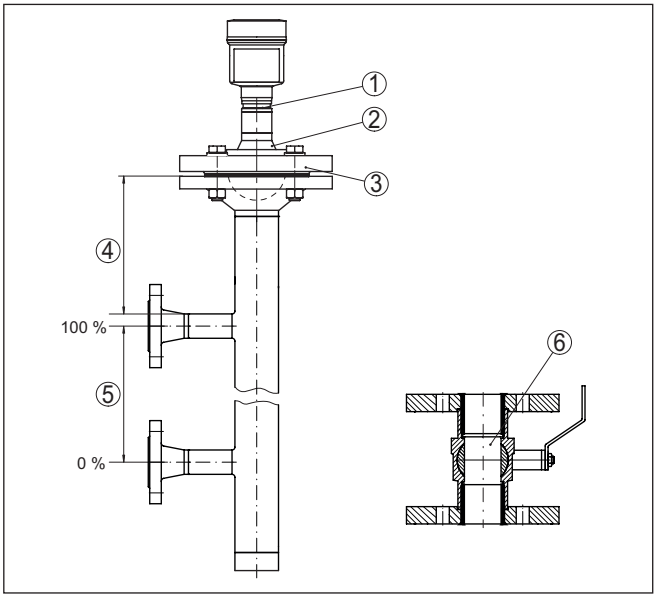

Fig. 42: Configuration - bypass

1 Radar sensor
2 Polarisation marking
3 Instrument flange
4 Distance sensor reference plane to upper tube connection
5 Distance of the tube connections
6 Ball valve with complete opening

Instructions and requirements, bypass

Instruction of orientation of the polarisation:
Observe the polarisation marking on the sensor. The marking must be in the same plane as the pipe connections to the vessel

Instructions for the measurement:

- The 100 % point may not be above the upper tube connection to the vessel
- The 0 % point may not be below the lower tube connection to the vessel
- Min. distance, sensor reference plane to upper edge of upper tube connection > 200 mm
- The antenna diameter of the sensor should correspond to the inner diameter of the tube
- A false signal suppression with the installed sensor is recommended but not mandatory
- Measurement through a ball valve with unrestricted channel is possible
- The deviation can increase in the area of the connecting tube to the container ± 200 mm

MAN 1000602417 EN Version: C Status: RL (released | freigegeben) printed: 26.06.2026

Constructional requirements on the bypass pipe:

- Material metal, smooth inner surface
- In case of an extremely rough tube inner surface, use an inserted tube (tube in tube) or a radar sensor with tube antenna
- Flanges are welded to the tube according to the orientation of the polarisation
- Gap size with junctions ≤ 1 mm (for example, when using a ball valve or intermediate flanges with single pipe sections)
- Diameter must be constant over the complete length

5.8 Measurement setup - surge pipe

Measurement in a surge pipe

By using a surge pipe in the vessel, the influence of vessel installations and turbulence can be excluded. Under these prerequisites, the measurement of products with low dielectric values (ε_r value ≤ 1.6) is possible.

Information:
Measurement in a surge pipe is not recommended for extremely adhesive products.

Note the following illustrations and instructions for measurement in a surge pipe.

1026255-EN-260316

MAN 1000602417 EN Version: C Status: RL (released | freigegeben) printed: 26.06.2026

Configuration - surge pipe

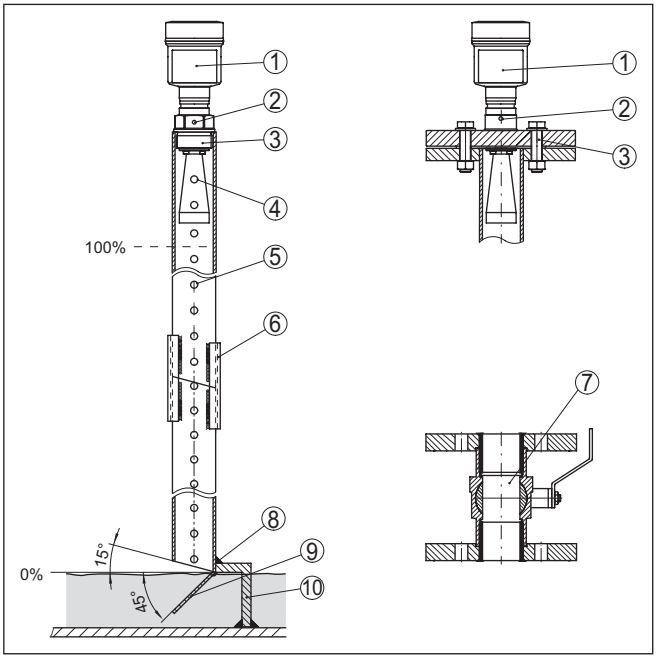

Fig. 43: Configuration - surge pipe (example)

1 Radar sensor
2 Polarisation marking
3 Thread or flange on the instrument
4 Vent hole
5 Holes
6 Welding connection through U-profile
7 Ball valve with complete opening
8 Surge pipe end
9 Reflector sheet
10 Fastening

Surge pipe extension

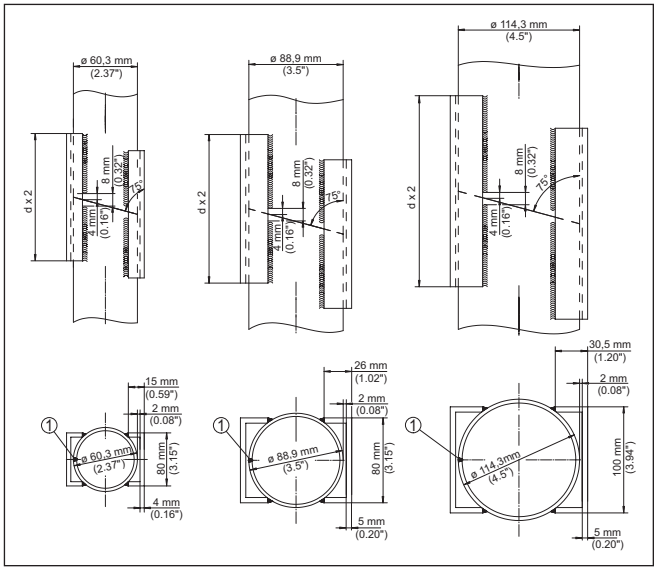

Fig. 44: Welding connection with surge pipe extension (examples)

1 Position of the welded joint with longitudinally welded pipes

Instructions and requirements

Instructions of orientation of the polarisation:
Observe the polarisation marking on the sensor. For threaded versions, the marking is located on the hexagon, for flange versions between two flange holes. The marking must be in the same plane as the holes in the surge pipe.

Instructions for the measurement:

- The 100 % point must be below the upper vent hole and the antenna edge
- The 0 % point is the end of the surge pipe
- During parameter adjustment, select application "*Standpipe*" and enter the tube diameter to compensate for errors due to running time shift
- A false signal suppression with the installed sensor is recommended but not mandatory
- Measurement through a ball valve with unrestricted channel is possible

Constructive requirements:

- Material metal, smooth inner surface
- Preferably longitudinally welded or drawn stainless steel tube
- Welded joint must be straight and lie in one axis with the holes
- Flanges are welded to the tube according to the orientation of the polarisation
- When using a ball valves, align the transitions on the inside and fix accurately

MAN 1000602417 EN Version: C Status: RL (released | freigegeben) printed: 26.06.2026

1026255-EN-260316

- Gap size with junctions ≤ 0.1 mm
- Surge pipes must extend all the way down to the requested min. level, as measurement is only possible within the tube
- Diameter of holes ≤ 5 mm, any number OK, on one side or completely through
- The antenna diameter of the sensor must correspond to the inner diameter of the tube
- Diameter should be constant over the complete length

Instructions for surge pipe extension:

- The ends of the extension tubes must be bevelled and exactly aligned
- Welded connection via external U profiles. Length of the U profiles should be at least double the tube diameter
- Do not weld through the pipe wall. The surge pipe must remain smooth inside. Roughness and beads on the inside caused by unintentional penetration should be removed since they cause strong false echoes and encourage buildup
- An extension via welding neck flanges or pipe collars is not recommended

5.9 Measurement setup - Flow

Mounting

In general, the following must be observed while mounting the device:

- Mounting the sensor on the upstream or inlet side
- Installation in the centre of the flume and vertical to the liquid surface
- Distance to the overfall orifice or Venturi flume
- Distance to the max. height of the orifice or flume for optimum accuracy: > 250 mm (9.843 in)[5)]
- Requirements from approvals for flow measurement, e.g. MCERTS

Flume

Predefined curves:

A flow measurement with these standard curves is very easy to set up, as no dimensional information of the flume is required.

- Palmer-Bowlus flume ($Q = k \times h^{1.86}$)
- Venturi, trapezoidal weir, rectangular flume ($Q = k \times h^{1.5}$)
- V-Notch, triangular overfall ($Q = k \times h^{2.5}$)

Channel with dimensions according to ISO standard:

When selecting these curves, the dimensions of the flume must be known and entered via the assistant. As a result, the accuracy of the flow measurement is higher than with the specified curves.

- Rectangular flume (ISO 4359)
- Trapezoidal flume (ISO 4359)
- U-shaped flume (ISO 4359)
- Triangular overfall thin-walled (ISO 1438)
- Rectangular flume thin-walled (ISO 1438)

[5)] The value given takes into account the block distance. At smaller distances, the measuring accuracy is reduced, see "Technical data".

MAN 1000602417 EN Version: DC Status: RL (released | freigegeben) printed: 26.06.2026

1026255-EN-260316

MAN 1000602417 EN Version: C Status: RL (released | freigegeben) printed: 26.06.2026

- Rectangular weir broad crown (ISO 3846)

Flow formula:
If the flow formula of your flume is known, you should select this option, as the accuracy of the flow measurement is highest here.

- Flow formula: $Q = k \times h^{exp}$

Manufacturer definition:
If you use a Parshall flume from the manufacturer ISCO, this option must be selected. This gives you a high accuracy of flow measurement with easy configuration.

Alternatively, you can also take over Q/h table values provided by the manufacturer here.

- ISCO Parshall flume
- Q/h table (assignment of height with corresponding flow in a table)

Tip:
Detailed project planning data can be found at the channel manufacturers and in the technical literature.

The following examples serve as an overview for flow measurement.

Rectangular overfall

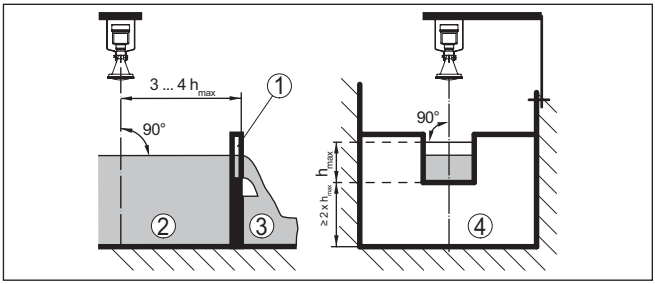

Fig. 45: Flow measurement with rectangular flume: $h_{max.}$ = max. filling of the rectangular flume

1 Overfall orifice (side view)
2 Upstream water
3 Tailwater
4 Overfall orifice (view from tailwater)

1026255-EN-260316

MAN 1000602417 EN Version: C Status: RL (released | freigegeben) printed: 26.06.2026

Khafagi-Venturi flume

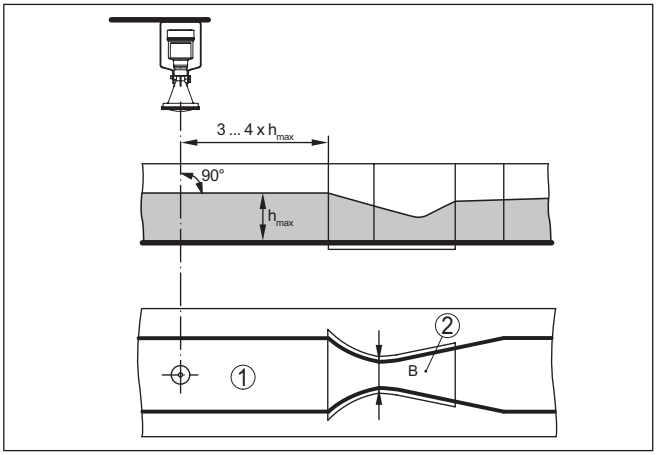

Fig. 46: Flow measurement with Khafagi-Venturi flume: $h_{max.}$ = max. filling of the flume; B = tightest constriction in the flume

1 Position sensor
2 Venturi flume

5.10 Measurement through plastics and glass

Measurement through plastics and glass

The radar signal emitted by the LEVEL TRANSMITTER 8140 can penetrate a wide variety of materials such as most plastics or glass. This property allows measurements to be taken directly through vessel walls/ceilings or free-standing measurements, e.g. for mobile plastic tanks (IBCs).

The following diagrams and notes must be observed when measuring through plastics and glass.

Configuration

Measurement through tank ceiling	Measurement through IBC containers

Instructions and requirements

Instructions for the measurement:

- Additional false signals can occur with free-standing measurements, so it is recommended that false signals are suppressed
- Changed reflection conditions as well as jumps in measured values when changing vessels
- Additional signal attenuation varies depending on application, material and material thickness or must be checked in individual cases

MAN 1000602417 EN Version: C Status: RL (released | freigegeben) printed: 26.06.2026

Constructive requirements:

- Plastics reflect the radar signal slightly, which can lead to additional interference at close range. If the mounting position is on a slightly sloping surface (e.g. vessel ceiling), the reflection is reflected to the side and does not contribute to the measurement
- When measuring (through the tank ceiling) outdoors, a protective roof over the measuring point is recommended to prevent rain or snow from collecting

Suitable materials and material thicknesses:

The following information is intended as a guideline.

Material	Material thickness	Material	Material thickness
HDPE	≤ 30 mm (≤ 1.18 in)	PVDF	≤ 20 mm (≤ 0.79 in)
PP	≤ 50 mm (≤ 1.97 in)	GFK	≤ 20 mm (≤ 0.79 in)
PTFE	≤ 50 mm (≤ 1.97 in)	Glass	≤ 20 mm (≤ 0.79 in)
PVC	≤ 30 mm (≤ 1.18 in)	Ceramic	≤ 15 mm (≤ 0.59 in)

1026255-EN-260316

6 Connecting to power supply

6.1 Preparing the connection

Safety instructions

Always keep in mind the following safety instructions:

- Carry out electrical connection by trained, qualified personnel authorised by the plant operator
- If overvoltage surges are expected, overvoltage arresters should be installed

Warning:
Only connect or disconnect in de-energized state.

Voltage supply

The data for power supply are specified in chapter "*Technical data*".

Note:
Power the instrument via an energy-limited circuit (power max. 100 W) acc. to IEC 61010-1, e.g.:

- Class 2 power supply unit (acc. to UL1310)
- SELV power supply unit (safety extra-low voltage) with suitable internal or external limitation of the output current
- PELV power supply unit (protective low voltage) with suitable internal or external limitation of the output current

Keep in mind the following additional factors that influence the operating voltage:

- Lower output voltage of the power supply unit under nominal load (e.g. with a sensor current of 20.5 mA or 22 mA in case of fault signal)
- Influence of additional instruments in the circuit (see load values in chapter "*Technical data*")

Connection cable

The instrument is connected with standard two-wire cable without shielding. If electromagnetic interference is expected which is above the test values of EN 61326-1 for industrial areas, shielded cable should be used.

Use cable with round cross section for instruments with housing and cable gland. Use a cable gland suitable for the cable diameter to ensure the seal effect of the cable gland (IP protection rating).

Shielded cable generally necessary in HART multidrop mode.

Cable glands

Metric threads:
In the case of instrument housings with metric thread, the cable glands are screwed in at the factory. They are sealed with plastic plugs as transport protection.

Note:
You have to remove these plugs before electrical connection.

NPT thread:
In the case of instrument housings with self-sealing NPT threads, it is not possible to have the cable entries screwed in at the factory. The

MAN 1000602417 EN Version: C Status: RL (released | freigegeben) printed: 26.02.2026

1026255-EN-260316

MAN 1000602417 EN Version: C Status: RL (released | freigegeben) printed: 26.06.2026

free openings for the cable glands are therefore covered with red dust protection caps as transport protection.

Note:
Prior to setup you have to replace these protective caps with approved cable glands or close the openings with suitable blind plugs.

On plastic housings, the NPT cable gland or the Conduit steel tube must be screwed into the threaded insert without grease.

Max. torque for all housings, see chapter "*Technical data*".

Cable screening and grounding

If shielded cable is required, we recommend connecting the cable screening on both ends to ground potential. In the sensor, the cable screening is connected directly to the internal ground terminal. The ground terminal on the outside of the housing must be connected to the ground potential (low impedance).

In Ex systems, the grounding is carried out according to the installation regulations.

In electroplating plants as well as plants for cathodic corrosion protection it must be taken into account that significant potential differences exist. This can lead to unacceptably high currents in the cable screen if it is grounded at both ends.

Note:
The metallic parts of the instrument (process fitting, sensor, concentric tube, etc.) are connected with the internal and external ground terminal on the housing. This connection exists either directly via the conductive metallic parts or, in case of instruments with external electronics, via the screen of the special connection cable.

You can find specifications on the potential connections inside the instrument in chapter "*Technical data*".

6.2 Connecting

Connection technology

The voltage supply and signal output are connected via the spring-loaded terminals in the housing.

Connection to the display and adjustment module or to the interface adapter is carried out via contact pins in the housing.

Connection procedure

Proceed as follows:

1. Unscrew the housing lid
2. If a display and adjustment module is installed, remove it by turning it slightly to the left
3. Loosen compression nut of the cable gland and remove blind plug
4. Remove approx. 10 cm (4 in) of the cable mantle, strip approx. 1 cm (0.4 in) of insulation from the ends of the individual wires
5. Insert the cable into the sensor through the cable entry
6. Insert the wire ends into the terminals according to the wiring plan

1026255-EN-260316

MAN 1000602417 EN Version: C Status: RL (released | freigegeben) printed: 26.06.2026

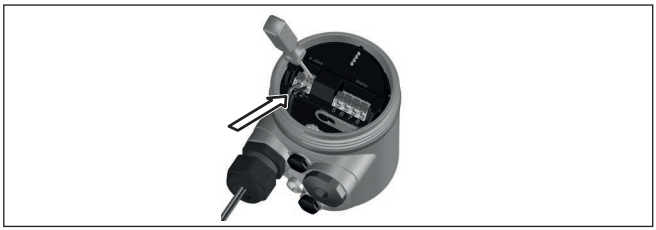

Note:
Fixed conductors and flexible conductors with ferrules can be inserted directly into the terminal openings. In the case of flexible conductors for opening the terminals, use a screwdriver (3 mm blade width) to push the actuator lever away from the terminal opening. When released, the terminals are closed again.

7. Check the hold of the wires in the terminals by lightly pulling on them
8. Connect the shielding to the internal ground terminal, connect the external ground terminal to potential equalisation
9. Tighten the compression nut of the cable entry gland. The seal ring must completely encircle the cable
10. Reinsert the display and adjustment module, if one was installed
11. Screw the housing lid back on

The electrical connection is finished.

6.3 Wiring plan - single chamber housing

The following illustration applies to the non-Ex as well as to the Ex ia version.

Electronics and connection compartment

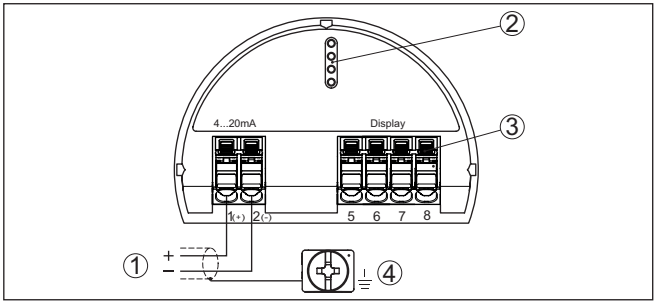

Fig. 47: Electronics and connection compartment - single chamber housing

1 Voltage supply, signal output
2 For display and adjustment module or interface adapter
3 For external display and adjustment unit
4 Ground terminal for connection of the cable screening

6.4 Wiring plan - version IP66/IP68 (1 bar)

Wire assignment, connection cable

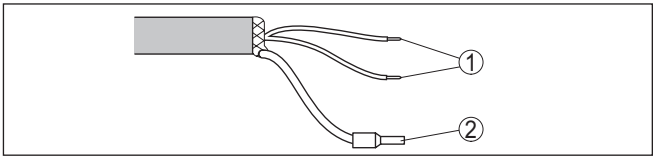

Fig. 48: Wire assignment in permanently connected connection cable

1 Brown (+) and blue (-) to power supply or to the processing system
2 Shielding

6.5 Switch-on phase

After connection to the power supply, the device carries out a self-test:

- Internal check of the electronics
- Output signal is set to malfunction

The current measured value is then output on the signal cable.

MAN 1000602417 EN Version: C Status: RL (released | freigegeben) printed: 26.06.2026

1026255-EN-260316

MAN 1000602417 EN Version: C Status: RL (released | freigegeben | printed: 26.06.2026

7 Access protection, IT security

7.1 Bluetooth radio interface

Devices with a Bluetooth radio interface are protected against unwanted access from outside. This means that only authorized persons can receive measured and status values and change device settings via this interface.

Bluetooth access code

A Bluetooth access code is required to establish Bluetooth communication via the adjustment tool (smartphone/tablet/notebook). This code must be entered once when Bluetooth communication is established for the first time in the adjustment tool. It is then stored in the adjustment tool and does not have to be entered again.

The Bluetooth access code is individual for each device. It is printed on the device housing with Bluetooth. In addition, it is supplied with the device in the information sheet "*PINs and Codes*" In addition, the Bluetooth access code can be read out via the display and adjustment unit, depending on the device version.

The Bluetooth access code can be changed by the user after the first connection is established. If the Bluetooth access code is entered incorrectly, the new entry is only possible after a waiting period has elapsed. The waiting time increases with each further incorrect entry.

Emergency Bluetooth unlock code

The emergency Bluetooth access code enables Bluetooth communication to be established in the event that the Bluetooth access code is no longer known. It can't be changed. The emergency Bluetooth access code can be found in information sheet "*Access protection*". If this document is lost, the emergency Bluetooth access code can be retrieved from your personal contact person after legitimation. The storage and transmission of Bluetooth access codes is always encrypted (SHA 256 algorithm).

7.2 Protection of the parameterization

The settings (parameters) of the device can be protected against unwanted changes. The parameter protection is deactivated on delivery, all settings can be made.

For SIL devices, the parameter protection is activated in the delivery status. For settings, adjustment must be released by entering the device code.

Device code

To protect the parameterization, the device can be locked by the user with the aid of a freely selectable device code. The settings (parameters) can then only be read out, but not changed. The device code is also stored in the adjustment tool. However, unlike the Bluetooth access code, it must be re-entered for each unlock. When using the adjustment app or DTM, the stored device code is then suggested to the user for unlocking.

Emergency device code

The emergency device code allows unlocking the device in case the device code is no longer known. It can't be changed. The emergency

1026255-EN-260316

MAN 1000602417 EN Version: C Status: RL (released | freigegeben) printed: 26.06.2026

device code can also be found on the supplied information sheet "*Access protection*". If this document is lost, the emergency device code can be retrieved from your personal contact person after legitimation. The storage and transmission of the device codes is always encrypted (SHA 256 algorithm).

7.3 IT Security (IEC 62443-4-2)

The device in version with IT security (IEC 62443-4-2) provides protection against the following threats:

- Data manipulation (violation of integrity)
- Denial of Service DoS (violation of availability)
- Spying (breach of confidentiality)

For this purpose, the device has proven safety functions:

- User authentication
- Event memory (logging)
- Integrity check of the firmware
- Resource management
- Data backup for recovery

Note:
Observe the requirements from the documents "*Cyber Security according to IEC 62443-4-2*" as well as the "*Component Requirements*" for the LEVEL TRANSMITTER 8140. They must be fulfilled in order for the staggered security strategy of the device to take effect as intended. You can find the documents on our homepage.

1026255-EN-260316

8 Functional safety (SIL)

8.1 Objective

Background

In case of dangerous failures, processing facilities and machines can cause risks for persons, environment and property. The risk of such failures must be judged by the plant operator. Dependent thereon are measures for risk reduction through error prevention, error detection and fault control.

Plant safety by risk reduction

The part of plant safety depending on the correct functioning of safety-related components for risk reduction is called functional safety. Components used in such safety-instrumented systems (SIS) must therefore execute their intended function (safety function) with a defined high probability.

Standards and safety levels

The safety requirements for such components are described in the international standards IEC 61508 and 61511, which set the standard for uniform and comparable judgement of instrument and plant (or machine) safety and hence contribute to worldwide legal certainty. We distinguish between four safety levels, from SIL1 for low risk to SIL4 for very high risk (SIL = Safety Integrity Level), depending on the required degree of risk reduction.

8.2 SIL qualification

Properties and requirements

When developing instruments that can be used in safety-instrumented systems, the focus is on avoiding systematical errors as well as determining and controlling random errors.

Here are the most important characteristics and requirements from the perspective of functional safety according to IEC 61508 (Edition 2):

- Internal monitoring of safety-relevant circuit parts
- Extended standardization of the software development
- In case of failure, switching of the safety-relevant outputs to a defined safe state
- Determination of the failure probability of the defined safety function
- Reliable parameterization with non-safe user environment
- Proof test

Safety Manual

The SIL qualification of components is specified in a manual on functional safety (Safety Manual). Here, you can find all safety-relevant characteristics and information the user and the planner need for planning and operating the safety-instrumented system. This document is attached to each instrument with SIL rating and can be also found on our homepage via the search.

Identification SIL device

Functional safety (SIL) is a feature of the device configuration.

A SIL device can be identified as follows:

- SIL logo on the type label
- Safety Manual in the scope of delivery

MAN 1000602417 EN Version: C Status: RL (released | freigegeben) printed: 26.03.2026

1026255-EN-260316

- Device configuration (order confirmation, device search)

8.3 Application area

The instrument can be used for point level detection or level measurement of liquids and bulk solids in safety-instrumented systems (SIS) according to IEC 61508 and IEC 61511. Take note of the specifications in the Safety Manual.

The following output is permissible for this:

- Current output (I) - 4 … 20 mA/HART

Note:
The second current output (II) does not fulfil the requirements of safety instrumented systems (SIS). In this context, it is for informational use only.

8.4 Safety concept of the parameterization

Tool for operation and parameterization

The following tools are permissible for parameter adjustment of the safety function with the current status:

- Adjustment app
- DTM suitable for the device in conjunction with an adjustment software according to the FDT/DTM standard, e. g. PACTware

Note:
The change of safety-relevant parameters is only possible with active connection to the instrument (online mode)

Safe parameterization

To avoid possible errors during parameter adjustment in a non-safe user environment, a verification procedure is used that makes it possible to detect parameter adjustment errors reliably. For this, safety-relevant parameters must be verified after they are stored in the device. In normal operating condition, the instrument is also locked against parameter changes through unauthorized access.

Safety-relevant parameters

SIL

In SIL applications, the parameters must be protected against unintentional or unauthorised operation. For this reason, the SIL version of the device is delivered in a locked state.

The following safety-relevant parameters must be verified after a change.

- Type of medium
- Application
- Distance A (max. value)
- Distance B (min. value)
- Damping
- Current output
- Reaction when malfunctions occur
- False signal suppression
- Behaviour with echo loss

MAN 1000602247 EN Version: C Status: RE (released | freigegeben) printed: 26.06.2026

1026255-EN-260316

MAN 1000602417 EN Version: C Status: RL (released | freigegeben) printed: 26.06.2026

The parameter settings of the measuring point must be documented. A list of the safety-relevant parameters can be stored and printed additionally by the PACTware/DTM.

Information:
When shipped with a specific parameter adjustment, the instruments are accompanied by a list with the values deviating from the default setting.

Unlock adjustment

For each parameter change, the device must be unlocked via the device code (see chapter "*Parameter adjustment, setup steps - Lock adjustment*"). The device status is indicated in the respective adjustment tool by the symbol of an unlocked or locked padlock.

Unsafe device status

Warning:
If adjustment is enabled, the safety function must be considered as unreliable. This applies until the parameterisation is terminated correctly. If necessary, other measures must be taken to maintain the safety function.

Change parameters

All parameters changed by the operator are automatically stored temporarily so that they can be verified in the next step.

Verify parameters/Lock adjustment

After setup, the modified parameters must be verified (confirm the correctness of the parameters). To do this, you first have to enter the device code. Here the adjustment is locked automatically. Then you carry out a comparison of two character strings. You must confirm that the character strings are identical. This is used to check the character presentation.

Then you confirm that the serial number of your instrument has been carried over correctly. This is used to check device communication.

Then, all modified parameters that have to be confirmed are listed. After this process is terminated, the safety function is again ensured.

Incomplete process

Warning:
If the described process was not carried out completely or correctly (e.g. due to interruption or voltage loss), the instrument remains in an unlocked, and thus unsafe, status.

Instrument reset

Warning:
When the device is reset to default settings, all of the safety-relevant parameters are reset. Therefore, these must be checked or readjusted afterwards.

8.5 First setup

8.5.1 Overview

The initial setup serves to check the device version and the current parameters under the existing measurement conditions. This determines whether this constellation is suitable for providing qualified measurement data for safety-related instrumentation.

Printed: 26.06.2026
MAN 1000602417 EN Version: C Status: RL (released | freigegeben)

SIL To fulfil the requirements for SIL conformity, we recommend carrying out the first setup via the function "*Verify and lock (inclusive setup assistant)*". This function is available in the adjustment app as well as PACTware/DTM (see previous chapter "*Safety concept of the parameter adjustment, tools for adjustment and parameterisation*").

8.5.2 Setup process

Operating sequence SIL A parameter change with SIL qualified instruments must always be carried out as follows:

- Unlock adjustment
- Change parameters
- Function test, if necessary
- Lock adjustment and verify modified parameters

The process is run by the setup wizard in the adjustment app or PACTware/DTM.

The meaning and handling of the individual steps are described in the chapter "*Security concept for parameter adjustment*".

Function test

Information:
The central part of the initial setup is the function test. When running through the setup assistant, the device decides on the basis of its evaluation results which options of the function test are available in the individual case.

The LEVEL TRANSMITTER 8140 basically offers the following function test options:

Option of the function test	Medium	Level
	Without medium	Empty vessel
	With medium	Current level
	With medium	Controlling defined levels

The individual options are described in the following chapter.

8.6 Function test

8.6.1 Function test without medium - empty vessel

Description

Here, the user must start a measurement to determine the echo quality in an empty vessel. Based on these data, the device calculates over the entire measuring range whether an adequate output signal is available for every level when filling with medium later.

8.6.2 Function test with medium - any level

Description

Here, the user must start a measurement to evaluate the echo quality of the medium at the current level. Based on these data, the device calculates over the entire measuring range whether an adequate output signal is available for every other level.

8.6.3 Function test with medium - move to defined levels

Description

Here, the user must active perform a function test by moving to defined levels. Is then checking by several measurements whether the respective output signal corresponds to the actual level.

Information:
This option is always available regardless of the result of the check by the device.

Procedure

In this function test, you test the safety function of the device when it is installed in the vessel with original medium.

For this purpose, you should know the current filling height of the vessel as well as the min. and max. levels respectively for 4 and 20 mA. You then can calculate the respective output current.

Measure the output current of the device with a suitable multimeter and compare the measured output current with the calculated output current.

Interruption

If you have to interrupt the function test, you can leave the device in the respective situation. As long as the device is supplied with voltage, the display and adjustment module remains in the currently set adjustment menu.

If you carry out the function test by means of the "*PACTware*" software, you can store the previously performed tests and continue from there later on.

Completion

If you click "*Complete*" the function test is completed, the parameters are verified and the operation of the device is blocked.

Information:
When operated via PACTware/DTM, a setup protocol is provided. It includes all test results for archiving in your system documentation.

Function test

Proceed as follows for the function test, depending on the mode:

Monitoring upper limit value:

1. Raise the level to directly below the switching point
2. Observe holding time of 1 minute, compare measured value with the calculated current value
3. Lower the level to directly above the switching point
4. Observe holding time of 1 minute, compare measured value with the calculated current value

Monitoring lower limit value:

1. Lower the level to directly above the switching point

MAN 1000602417 EN Version: C Status: RL (released | freigegeben) printed: 26.06.2026

1026255-EN-260316

MAN 1000602417 EN Version: C Status: RL (released | freigegeben) printed: 26.06.2026

2. Observe holding time of 1 minute, compare measured value with the calculated current value
3. Raise the level to directly below the switching point
4. Observe holding time of 1 minute, compare measured value with the calculated current value

Range monitoring:

1. Move to level immediately above the upper range limit
2. Observe holding time of 1 minute, compare measured value with the calculated current value
3. Move to three levels within the range limits (upper, middle, lower value)
4. Observe holding time respectively of 1 minute, compare measured values with the calculated current values
5. Move to level immediately below the lower range limit
6. Observe holding time of 1 minute, compare measured value with the calculated current value

Result:
The measured output current must in all cases correspond to the output current calculated for the respective level.

Note:
You have to determine the permissible deviation of the values yourself. This deviation depends on the the accuracy requirements of your measurement loop. For this, determine the permissible tolerance for the deviation.

8.7 Parameter adaptations after the first setup

In the case of further parameter adjustments after initial setup, the device checks the current checksum (CRC) of the parameters respectively. This determines whether qualified measurement data are still available for safety-oriented instrumentation.

Note:
If the current checksum is identical to the last checksum, the setup assistant no longer needs to be run through. In this case, the parameter adjustment is completed by simply "*Verify and lock*".

1026255-EN-260316

MAN 1000602417 EN Version: C Status: RL (released | freigegeben) printed: 26.06.2026

9 Set up with the display and adjustment module

9.1 Insert display and adjustment module

The display and adjustment module can be inserted into the sensor and removed again at any time. You can choose any one of four different positions - each displaced by 90°. It is not necessary to interrupt the power supply.

Proceed as follows:

1. Unscrew the housing lid
2. Place the display and adjustment module on the electronics in the desired position and turn it to the right until it snaps in.
3. Screw housing lid with inspection window tightly back on

Disassembly is carried out in reverse order.

The display and adjustment module is powered by the sensor, an additional connection is not necessary.

Note:
If you intend to retrofit the instrument with a display and adjustment module for continuous measured value indication, a higher lid with an inspection glass is required.

9.2 Adjustment system

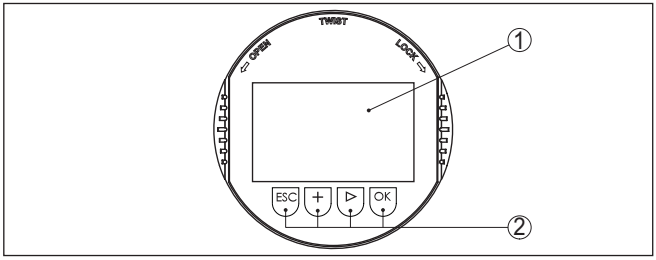

Fig. 49: Display and adjustment elements

1 LC display
2 Adjustment keys

Key functions

- ***[OK]*** key:
  - Move to the menu overview
  - Confirm selected menu
  - Edit parameter
  - Save value
- ***[->]*** key:
  - Change measured value presentation
  - Select list entry
  - Select menu items
  - Select editing position
- ***[+]*** key:

1026255-EN-260316

– Change value of the parameter

- ***[ESC]*** key:
  – Interrupt input
  – Jump to next higher menu

Adjustment system

The instrument is operated via the four keys of the display and adjustment module. The individual menu items are shown on the LC display. You can find the function of the individual keys in the previous illustration.

Adjustment system - keys via magnetic pen

With the Bluetooth version of the display and adjustment module you can also adjust the instrument with the magnetic pen. The pen operates the four keys of the display and adjustment module right through the closed lid (with inspection window) of the sensor housing.

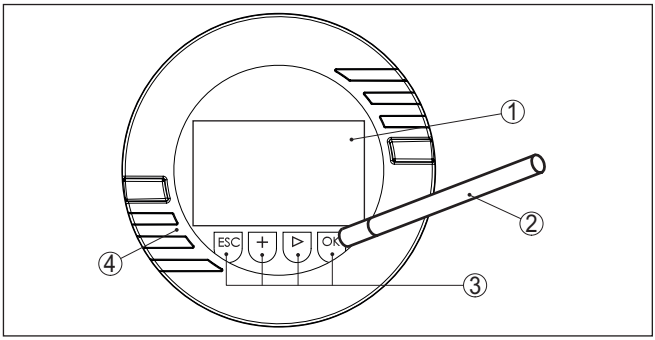

Fig. 50: Display and adjustment elements - with adjustment via magnetic pen

1 LC display
2 Magnetic pen
3 Adjustment keys
4 Lid with inspection window

Time functions

When the ***[+]*** and ***[->]*** keys are pressed quickly, the edited value, or the cursor, changes one value or position at a time. If the key is pressed longer than 1 s, the value or position changes continuously.

When the ***[OK]*** and ***[ESC]*** keys are pressed simultaneously for more than 5 s, the display returns to the main menu. The menu language is then switched over to "*English*".

Approx. 60 minutes after the last pressing of a key, an automatic reset to measured value indication is triggered. Any values not confirmed with ***[OK]*** will not be saved.

9.3 Measured value indication - Selection of national language

Measured value indication

With the ***[->]*** key you move between three different display possibilities:

MAN 1000602417 EN Version: C Status: RL (released | freigegeben) printed: 26.06.2026

1026255-EN-260316

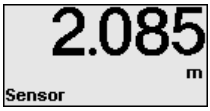

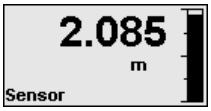

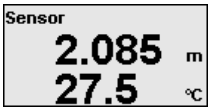

With the "***OK***" key you move to the menu overview.

Note:
During the first setup, you move with the "***OK***" key to the selection menu "*Menu language*".

Menu language

In this menu item, you can select the menu language for further parameterization.

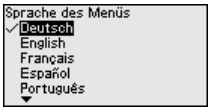

Information:
A later change of the selection is possible via the menu item "*Setup, display, menu language*".

With the "***OK***" key you move to the menu overview.

9.4 Parameter adjustment

9.4.1 Lock/Unlock adjustment

Lock/Unlock adjustment (non-SIL)

In this menu item you safeguard the sensor parameters against unauthorized or unintentional modifications.

Information:
The non-SIL version of the device is delivered without activated access protection. If necessary, the access protection can be activated and the device locked.

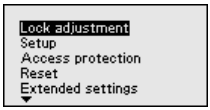

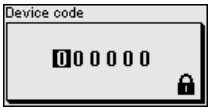

When the adjustment is blocked, only the following adjustment functions are possible without entering the device code:

- Select menu items and show data
- Read data from the sensor into the display and adjustment module

Caution:
When the adjustment is blocked, the adjustment via other systems is also blocked.

MAN 1000602417 EN Version: C Status: RL (released | freigegeben) printed: 26.06.2026

1026255-EN-260316

MAN 1000602417 EN Version: C Status: RL (released | freigegeben) printed: 26.02.2026

Releasing the sensor adjustment is also possible in any menu item by entering the device code.

Lock/Unlock adjustment (SIL)

In this menu item you safeguard the sensor parameters against unauthorized or unintentional modifications.

Information:
The SIL version of the device is delivered in locket state.

Safe parameterization:
To avoid possible errors during parameterization in a non-safe user environment, a verification procedure is used that makes it possible to detect parameterization errors reliably. For this, safety-relevant parameters must be verified before they are stored in the device. In normal operating condition, the instrument is also locked against parameter changes through unauthorized access.

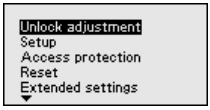

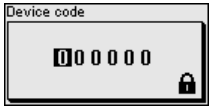

Information:
If the device code has been changed and forgotten, the enclosed information sheet "*Access Protection*" provides an emergency device code.

Character string comparison and serial number:
You first have to carry out the character string comparison. This is used to check the character respresentation.

Confirm if the two character strings are identical. The verification texts are provided in German and in the case of all other menu languages, in English.

Afterwards you confirm that the serial number of your instrument was carried over correctly. This is used to check device communication.

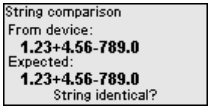

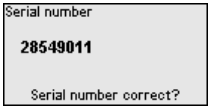

In the next step, the instrument checks the data of the measurement and decides by means of the evaluation results if a functions test is required. If a function test is necessary, the following message is displayed.

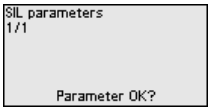

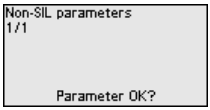

MAN 1000602417 EN Version: C Status: RL (released | freigegeben) printed: 26.06.2026

In this case, you have to carry out a function test.

Function test:
During a function test, you have to test the safety function of the instrument in the vessel with the original medium.

SIL You can find the detailed sequence of the function test in chapter "*Functional safety (SIL)*" of the operating instructions.

Verify parameter:
All safety-relevant parameters must be verified after a change. After the function test, all modified, safety-relevant parameters will be listed. Confirm the modified values one after the other.

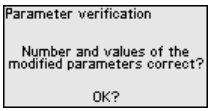

If the described process of parameter adjustment was run through completely and correctly, the instrument will be locked and hence ready for operation.

Otherwise the instrument remains in the released and hence unsafe condition.

Note:
When the adjustment is blocked, the adjustment via other systems is also blocked.

9.4.2 Setup

Measurement loop name

Here you can assign a suitable measurement loop name.

You can enter names with max. 19 characters. The character set comprises:

- Capital letters from A … Z
- Numbers from 0 … 9
- Special characters + - / _ blanks

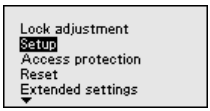

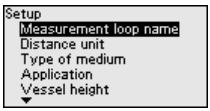

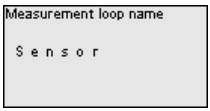

Distance unit

In this menu item you select the distance unit of the device.

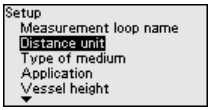

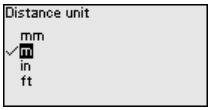

1026255-EN-260316

MAN 1000602417 EN Version: C Status: RL (released | freigegeben) printed: 26.06.2026

Type of medium

This menu item allows you to adapt the sensor to the different measuring conditions of the media "*Liquid*" or "*Bulk solid*".

The corresponding application is selected in the following menu item "*Application*".

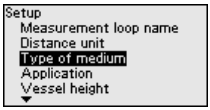

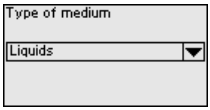

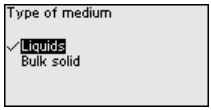

Application - liquid

With "*Liquid*", the applications are based on the following features, to which the measuring characteristic of the sensor is adjusted in particular:

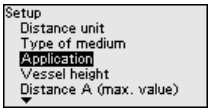

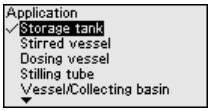

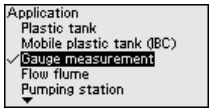

Application	Vessel	Process/measurement conditions	Recommendations
Storage tank	Large volume Upright cylindrical, horizontal round	Slow filling and emptying Smooth medium surface Multiple reflections from dished vessel ceiling Condensation	
Stirrer vessel	Large agitator blades of metal Installations like flow breakers, heating spirals Nozzle	Frequent, fast to slow filling and emptying Strongly agitated surface, foam and strong vortex generation Multiple reflections through dished vessel ceiling Condensation, buildup on the sensor	False signal suppression with running agitator
Dosing vessel	Small vessels	Frequent and fast filling/emptying Tight installation situation Multiple reflections through dished vessel ceiling Product buildup, condensate and foam generation	
Standpipe	Standpipe in the vessel	Tubes with different diameters and openings for product mixing Welded connections or mechanical joints with very long tubes	Orientation of the polarisation direction False signal suppression
Bypass	Bypass tube outside the vessel Typical lengths: up to 6 m	Tubes with different diameters Lateral connections to the vessel	Orientation of the polarisation direction False signal suppression

1026255-EN-260316

Application	Vessel	Process/measurement conditions	Recommendations
Vessel/Collecting basin 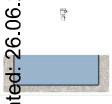	Large volume Upright cylindrical or rectangular	Slow filling and emptying Smooth medium surface Condensation	
Plastic tank (measurement through the vessel top)		Measurement through the tank top, if appropriate to the application Condensation on the plastic ceiling In outdoor facilities, water and snow on vessel top possible	When measuring through the tank top: False signal suppression When measuring through the tank top (outdoor areas): Protective roof for the measuring point
Transportable plastic tank (IBC)	Small vessels	Material and thickness different Measurement through the vessel top, if appropriate to the application Changed reflection conditions as well as jumps in measured values when changing vessels	When measuring through the tank top: False signal suppression When measuring through the tank top (outdoor areas): Protective roof for the measuring point
Gauge measurement, waters		Slow gauge change Extreme damping of output signal in case of wave generation Ice and condensation on the antenna possible Floating debris sporadically on the water surface	
Flow measurement flume/Overfall		Slow gauge change Smooth to agitated water surface Measurement often from a short distance with the demand for accurate measurement results Ice and condensation on the antenna possible	
Pumping station/ Pump shaft		Partly strongly agitated surface Installations such as pumps and ladders Multiple reflections through flat vessel ceiling Dirt and grease deposits on shaft wall and sensor Condensation on the sensor	False signal suppression

MAN 1000002417 EN Version: C Status: RL (released | freigegeben) printed: 26.06.2026

Application	Vessel	Process/measurement conditions	Recommendations
Overflow basin (RÜB) 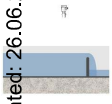	Large volume Partly installed underground	Partly strongly agitated surface Multiple reflections through flat vessel ceiling Condensation, dirt deposits on the sensor Flooding of the sensor antenna	
Demonstration	Applications for non-typical level measurements, e.g. device tests	Instrument demonstration Object recognition/monitoring Fast position changes of a measuring plate during functional test	

Application - bulk solid

With "*Bulk solid*", the applications are based on the following features, to which the measuring characteristic of the sensor is adjusted in particular:

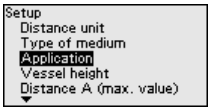

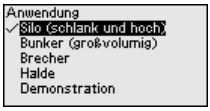

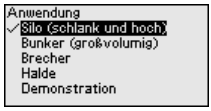

Application	Vessel	Process/measurement conditions	Recommendations
Silo	Slim and high Upright cylindrical	Interfering reflections due to weld seams on the vessel Multiple echoes/diffuse reflections due to unfavourable pouring positions with fine grain Varying pouring positions due to outlet funnel and filling cone	False signal suppression Alignment of the measurement to the silo outlet
Bunker 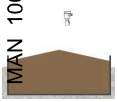	Large volume	Large distance to the medium Steep angles of repose, unfavourable pouring positions due to outlet funnel and filling cone Diffuse reflections due to structured vessel walls or internals Multiple echoes/diffuse reflections due to unfavourable pouring positions with fine grain Changing signal conditions when large amounts of material slip off	False signal suppression
Crusher		Measured value jumps and varying pouring positions, e.g. due to truck filling Fast reaction time Large distance to the medium Interfering reflections from fixtures or protective devices	False signal suppression

Printed: 26.06.2026 | Status: RL (released | freigegeben) | MAN 1000602417 EN Version: AC

Application	Vessel	Process/measurement conditions	Recommendations
Heap	Large volume Upright cylindrical or rectangular	Measured value jumps, e.g. through heap profile and traverses Large angles of repose, varying pouring positions Measurement near the filling stream Sensor mounting on movable conveyor belts	
Demonstration	Applications that are not typical level measurements, e.g. device tests	Instrument demonstration Object recognition/monitoring Measured value verification with higher measuring accuracy with reflection without bulk solids, e.g. via a measuring plate	

Vessel height

Through this selection the operating range of the sensor is adapted to the vessel height. Hence the measurement reliability is increased considerably under different basic conditions.

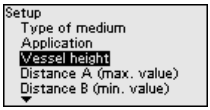

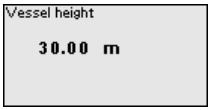

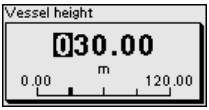

Note:
Regardless of this, the min. adjustment must also be carried out (see following section).

Adjustment

Since the radar sensor is a distance measuring instrument, it is the distance from the sensor to the medium surface that is measured. To indicate the actual level, the measured distance must be assigned to a certain height percentage (min./max. adjustment).

During adjustment, enter the respective measuring distance when the vessel is full and empty (see the following examples):

MAN 1000602417 EN Version: C Status: RL (released | freigegeben) printed: 26.06.2026

1026255-EN-260316

MAN 1000602417 EN Version: C Status: RL (released | freigegeben) printed: 26.06.2026

Liquids:

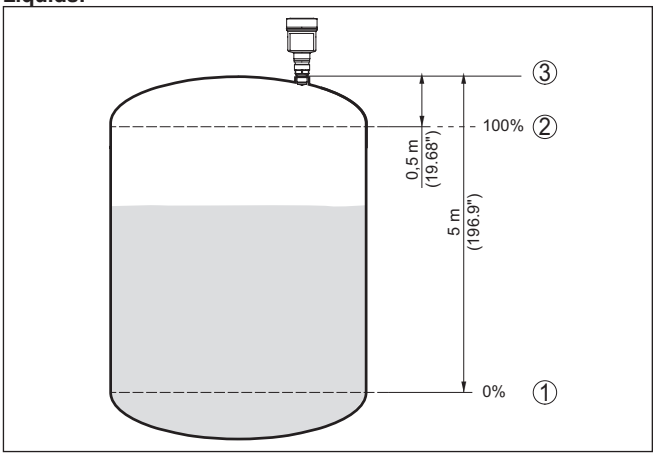

Fig. 51: Parameterisation example min./max. adjustment - liquids

1 Min. level = max. meas. distance (distance B)
2 Max. level = min. meas. distance (distance A)
3 Reference plane

Bulk solids:

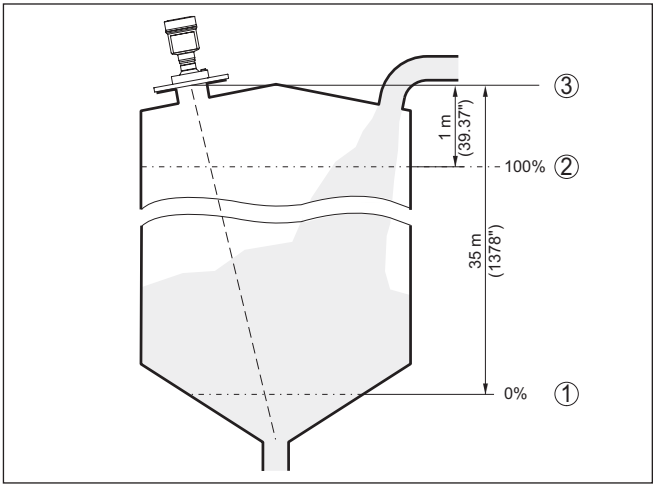

Fig. 52: Parameterisation example min./max. adjustment - bulk solids

1 Min. level = max. meas. distance (distance B)
2 Max. level = min. meas. distance (distance A)
3 Reference plane

If these values are not known, and adjustment can for example be carried out with the distances of 10 % and 90 %.

The starting point for these distance specifications is always the reference plane, e.g. the sealing surface of the thread or flange. Informa-

1026255-EN-260316

MAN 1000602417 EN Version: C Status: RL (released | freigegeben) printed: 26.06.2026

tion on the reference plane can be found in the chapters "*Mounting instructions*" resp. "*Technical data*". The actual filling height is then calculated on the basis of these entries.

The actual product level during this adjustment is not important, because the min./max. adjustment is always carried out without changing the product level. These settings can be made ahead of time without the instrument having to be installed.

Distance A (max. value)

Proceed as follows:

1. Select with ***[->]*** the menu item Distance A (max. value) and confirm with ***[OK]***.

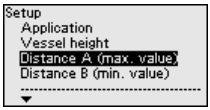

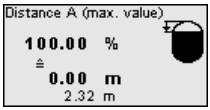

2. Edit the distance value with ***[OK]*** and set the cursor to the requested position with ***[->]***.
3. Adjust the requested distance value for 100 % with ***[+]*** and store with ***[OK]***.

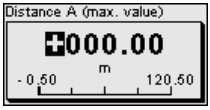

4. Move with ***[ESC]*** and ***[->]*** to the min. adjustment

Distance B (min. value)

Proceed as follows:

1. Select with ***[->]*** the menu item "*Distance B (min. value)*" and confirm with ***[OK]***.

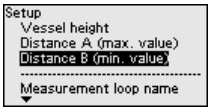

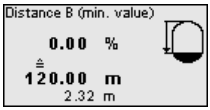

2. Edit the distance value with ***[OK]*** and set the cursor to the requested position with ***[->]***.
3. Set the requested distance value for 0 % (e.g. distance from the sensor up to the vessel bottom) with ***[+]*** and save with ***[OK]***. The cursor now jumps to the distance value.

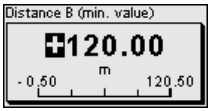

9.4.3 Access protection

Bluetooth access code

This menu item enables to change the factory-preset Bluetooth access code to your personal Bluetooth access code.

1026255-EN-260316

MAN 1000602417 EN Version: C Status: RL (released | freigegeben) printed: 26.06.2026

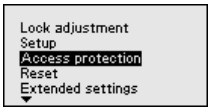

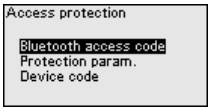

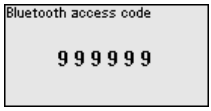

Note:
You can find the individual factory Bluetooth access code of the device on the information sheet supplied "*PINs and Codes*".

Protection of the parameterization

This menu item allows you to protect the sensor parameters from unwanted or unintended changes. To activate the protection, you must define and enter a 6-digit device code.

Note:
For SIL devices, the protection of the parameterisation is activated ex works. These devices have an individual device code. You will find it in the information sheet supplied "*PINs and Codes*".

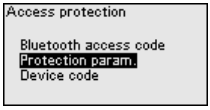

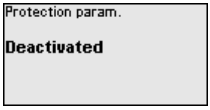

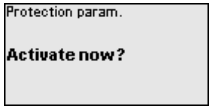

When protection is activated, the individual menu items can still be selected and displayed. However, the parameters can no longer be changed.

Releasing the sensor adjustment is also possible in any menu item by entering the device code.

Note:
When the parameter adjustment is protected, the adjustment via other systems is also blocked.

Device code

This menu item allows you to change the device code. It is only displayed if the parameterisation protection has been activated beforehand.

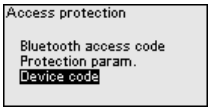

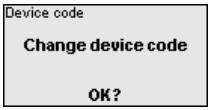

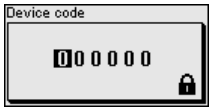

Note:
The changed device code is also effective for operation via other systems.

9.4.4 Reset

Reset

During a reset, parameter settings made by the user are reset to the values of the factory settings. You can fined the values in chapter "*Menu overview*".

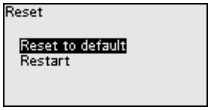

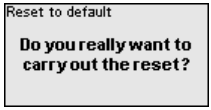

1026255-EN-260316

MAN 1000602417 EN Version: C Status: RL (released | freigegeben) printed: 26.06.2026

Information:
The language and Bluetooth access code are not reset, a currently running simulation however is aborted.

Reset - Factory settings:
- Restoring the factory and order-specific parameter settings
- Resetting a user-set measuring range to the recommended measuring range (see chapter "*Technical data*")
- Deleting a created false signal suppression, a user-programmable linearisation curve as well as the measured value and echo curve memory[6)]

Reset - Restart:
Is used to restart the device without switching off the operating voltage.

Note:
For the duration of the reset, the device changes its behaviour from the normal measuring operation. Therefore, observe the following for downstream systems:

- The current output outputs the set false signal
- The Asset-Management function outputs the message "*Maintenance*" aus

9.4.5 Extended settings

Temperature unit

In this menu item you select the temperature unit of the device.

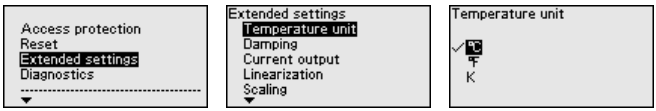

Damping

To damp process-dependent measured value fluctuations, set an integration time of 0 … 999 s in this menu item.

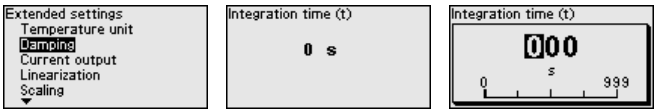

Current output - Output value

In this menu item you determine which measured value is output via the respective current output:

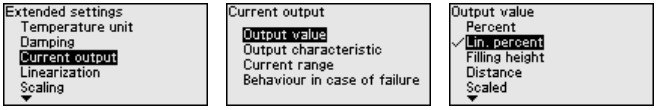

The following selection possibilities are available:

- Percent
- Linearized percent
- Filling height

[6)] The event and parameter change memories are maintained.

MAN 1000602 EN Version: C Status: RL (released | freigegeben) printed: 26.06.2026

- Distance
- Scaled
- Measurement reliability
- Electronics temperature
- Measuring rate
- Operating voltage

Current output - Initial/Final value characteristics

Here you determine which heights of the output value belong to the current values 4 mA and 20 mA .

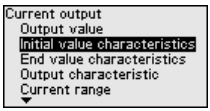

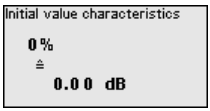

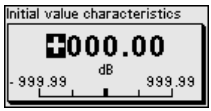

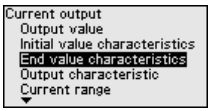

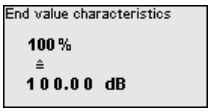

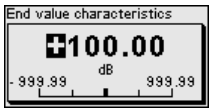

Note:
This menu item is only available if one of the following output values was selected for the current output:

- Measurement reliability
- Electronics temperature
- Measuring rate
- Operating voltage

Current output - Output characteristics

In the menu item "*Current output - Output characteristic*" you select for 0 … 100 % output value if the characteristic of the current output rises (4 … 20 mA) or falls (20 … 4 mA).

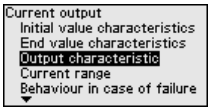

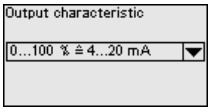

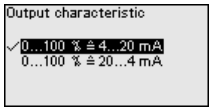

Current output - Current range

In the menu item "*Current output - Current range*" you determine the range of the current output as 4 … 20 mA or 3.8 … 20.5 mA.

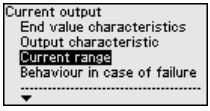

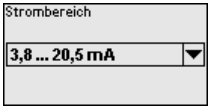

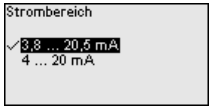

Current output - Reaction in case of malfunction

In the menu item "*Current output - Behaviour in case of malfunction*" you set the behaviour of the current output in case of failures as ≤ 3.6 mA or ≥ 21 mA resp. the last measured value.

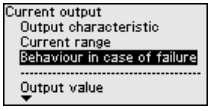

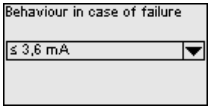

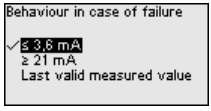

1026255-EN-260316

MAN 1000602417 EN Version: C Status: RL (released | freigegeben) printed: 26.06.2026

Linearisation

Linearisation is required for all vessels where the vessel volume does not increase linearly with the level and the display or output of the volume is desired. The same applies to flow measuring constructions and the relationship between flow and level.

Corresponding linearisation curves are stored for these measurement situations. They indicate the relationship between the percentage level and the vessel volume or flow rate. The selection depends on the selected linearisation type liquid or bulk solid.

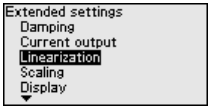

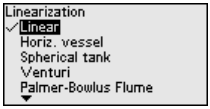

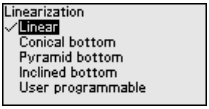

Note:
The selected linearisation applies to the measured value indication and the signal output.

Depending on the medium and the vessel bottom, the intermediate height is also entered, see next menu item.

Linearization - Intermediate height

The intermediate height is the beginning of the cylindrical area, e.g. for vessels with conical bottoms.

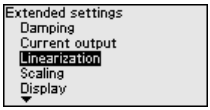

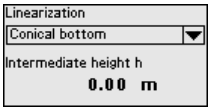

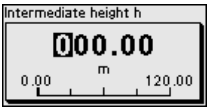

Scaling

In the menu item "*Scaling*" you define the scaling variable and unit as well as the scaling format. By doing so, it is for example the indication of the level measured value for 0 % and 100 % on the display as volume in l is possible.

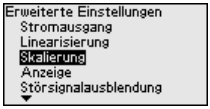

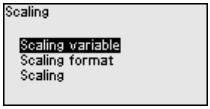

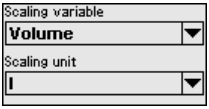

Display - Menu language

This menu item enables the setting of the requested national language.

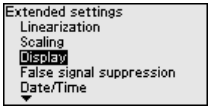

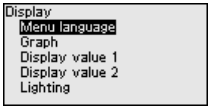

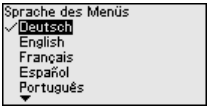

The following languages are available:

- German
- English
- French
- Spanish
- Portuguese
- Italian
- Dutch
- Russian

1026255-EN-260316

MAN 1000602417 EN Version: C Status: RL (released | freigegeben) printed: 26.06.2026

- Chinese
- Japanese
- Polish
- Czech
- Turkish

Display - Presentation

With the ***[->]*** key you move between three different display possibilities:

- Measured value in large font
- Measured value and corresponding bargraph presentation
- Measured value as well as second selectable value, e.g. electronics temperature

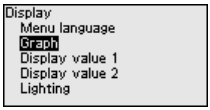

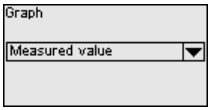

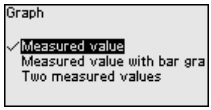

During the initial setup of an instrument shipped with factory settings, use the "***OK***" key to get to the menu "*National language*".

Display - Displayed value 1/2

In this menu item, you determine which measured values is displayed.

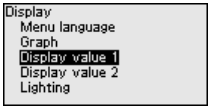

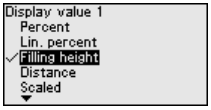

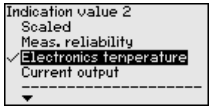

Display - Lighting

The display and adjustment module has a backlight for the display. In this menu item you can switch the lighting on or off. You can find the required operating voltage in chapter "*Technical data*".

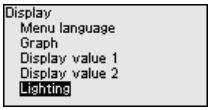

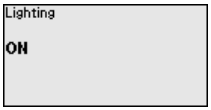

Note:
If the power supply is currently insufficient, the lighting is temporarily switched off (maintaining the device function).

False signal suppression

The following circumstances cause interfering reflections and can influence the measurement:

- High mounting nozzles
- Vessel internals such as struts
- Agitators
- Buildup or welded joints on vessel walls

A false signal suppression detects, marks and saves these false signals to ensure that they are ignored in the level measurement.

Note:
The false signal suppression should be done with the lowest possible level so that all potential interfering reflections can be detected.

1026255-EN-260316

MAN 1000602417 EN Version: C Status: RL (released | freigegeben) printed: 26.06.2026

Create new:
Proceed as follows:

1. Select with ***[->]*** the menu item "*False signal suppression*" and confirm with ***[OK]***.

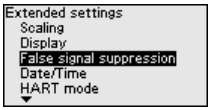

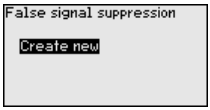

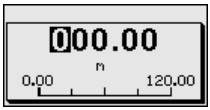

2. Confirm 2-times with ***[OK]*** and enter the actual distance from the sensor to the product surface.
3. All interfering signals in this range are detected by the sensor and stored after being confirmed with ***[OK]***.

Note:
Check the distance to the medium surface, because if an incorrect (too large) value is entered, the existing level will be saved as a false signal. The level would then no longer be detectable in this area.

If a false signal suppression has already been saved in the sensor, the following menu window appears when selecting "*False signal suppression*":

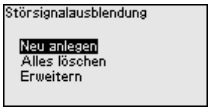

Delete all:
An false signal suppression that has already been created is completely deleted.

→ This is useful if the applied false signal suppression no longer matches the metrological conditions of the vessel.

Extend:
A false signal suppression that has already been created is extended. The distance to the medium surface of the created false signal suppression is displayed. This value can now be changed and the false signal suppression can be extended to this area.

→ This is useful if a false signal suppression was carried out when the level was too high and thus not all false signals could be detected.

Date/Time

In this menu item, the internal clock of the sensor is set to the desired time.

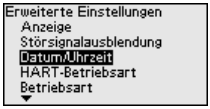

Note:
The device is set to CET (Central European Time) at the factory.

1026255-EN-260316

MAN 1000602417 EN Version: C Status: RRL (released | freigegeben) printed: 26.06.2026

HART mode

In this menu item you specify the HART mode and enter the address for multidrop mode.

HART address 0:
In the menu item "*Output mode*" the "*Analogue current output*" is displayed and a 4 … 20 mA signal output.

HART address deviation from 0:
In the menu item "*Output mode*" "*Fixed current (4 mA)*" is displayed and independent of the actual level a fixed 4 mA signal output. The level is output digitally via the HART signal.

In the mode "*Fixed current*" up to 63 sensors can be operated on one two-wire cable (Multidrop operation). An address between 0 and 63 must be assigned to each sensor.

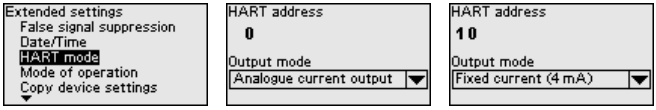

Mode of operation

This menu item contains operational settings of the sensor.

Mode of operation:
Country or region-specific settings for the radar signals are determined via the operating mode.

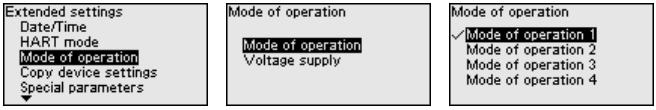

- Mode of operation 1: EU, Albania, Andorra, Azerbaijan, Australia, Belarus, Bosnia and Herzegovina, Canada, Egypt, Iceland, Liechtenstein, Moldavia, Monaco, Montenegro, Morocco, New Zealand, Northern Macedonia, Norway, San Marino, Saudi Arabia, Serbia, South-Africa, Switzerland, Turkey, Ukraine, United Kingdom, USA
- Mode of operation 2: Brazil, Japan, South Korea, Taiwan, Thailand
- Mode of operation 3: Chile, India, Malaysia, Zimbabwe
- Mode of operation 4: Russia, Kazakhstan

Note:
Depending on the operating mode, metrological properties of the device can change (see chapter "*Technical data, input variable*").

Voltage supply:
The power supply determines whether the sensor is in operation permanently or only in accordance with certain requirements.

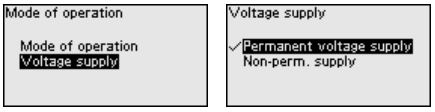

Copy instrument settings

The following functions are available:

1026255-EN-260316

MAN 1000602417 EN Version: C Status: RL (released | freigegeben) printed: 26.06.2026

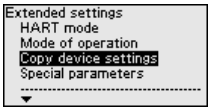

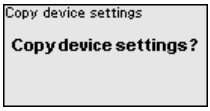

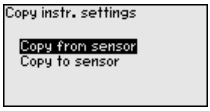

Load from sensor:
Store data from sensor in the display and adjustment module

Write to sensor:
Store data from display and adjustment module in the sensor

The following device settings are copied:

- Measurement loop name
- Application
- Units
- Adjustment
- Damping
- Current output
- Linearisation
- Scaling
- Indication
- PV adjustment
- Mode of operation
- Diagnostic behaviour

The copied data are permanently saved in an EEPROM memory in the display and adjustment module and remain there even in case of power failure. From there, they can be written into one or more sensors or kept as backup for a possible electronics exchange.

Note:
Before the data are saved in the sensor, a safety check is carried out to determine if the data match the sensor. In the process the sensor type of the source data as well as the target sensor are displayed. If the data do not match, a fault message is outputted or the function is blocked. The data are saved only after release.

Special parameters

Special parameters are used to adapt the sensor to special requirements. However, this is only necessary in rare cases.

However, only change the special parameters after consulting our service staff.

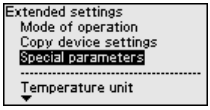

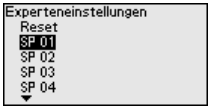

The special parameters can be reset to factory settings with "*Reset*".

Note:
The special parameters are described in a separate section at the end of the chapter "*Parameter adjustment*".

9.4.6 Diagnostics

Diagnosis status

The following is displayed in this menu item:

MAN 1000602417 EN Version: C Status: RL (released | freigegeben) printed: 26.06.2026

- Diagnosis status (device status OK or error messages)
- Change counter (number of the parameter changes)
- Checksum CRC (last SIL locking with date)

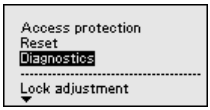

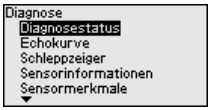

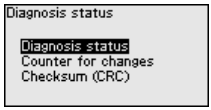

Echo curve

The "*Echo curve*" shows the signal strength of the echoes over the measuring range in dB. This enables an evaluation of the quality of the measurement.

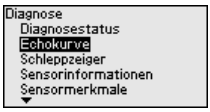

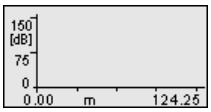

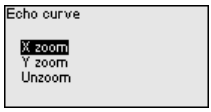

The selected curve is continuously updated. A submenu with zoom functions is opened with the ***[OK]*** key:

- "X-Zoom": Zoom function for the meas. distance
- "Y-Zoom": 1, 2, 5 and 10x signal magnification in "*dB*"
- "Unzoom": Reset the presentation to the nominal measuring range without magnification

Measured values/peak indicator

The following min./max. values saved by the sensor are displayed in the menu item "*Measured values/Peak indicator*":

- Distance
- Measurement reliability
- Measuring rate
- Electronics temperature
- Operating voltage

The ***[OK]*** key starts the dialog for resetting the current measured value in the respective peak indicator window:

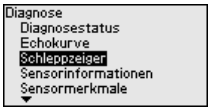

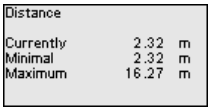

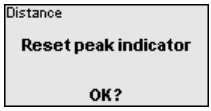

With the ***[OK]*** key, the peak indicator are reset to the actual measured values.

Diagnostic behaviour

In this menu item, you define what the signal output outputs in the event of an echo loss. For this purpose, the time after an echo loss until a fault message is selected.

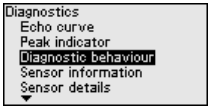

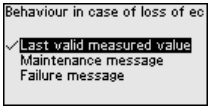

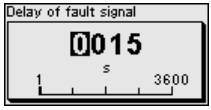

Sensor information

In this menu item the following information of the instrument can be read out:

1026255-EN-260316

MAN 1000602417 EN Version: C Status: RL (released | freigegeben) printed: 26.06.2026

- Device name
- Order and serial number
- Hardware and software version
- Device Revision
- Factory calibration date

as well as additionally depending on the device version:

- Instrument address
- Loop Current Mode
- Fieldbus Profile Rev.
- Expanded Device Type
- Sensor acc. to SIL
- Sensor acc. to WHG
- Bustype ID

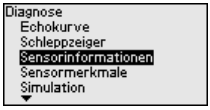

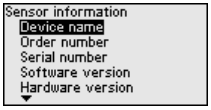

Sensor characteristics

The menu item "*Sensor characteristics*" delivers sensor characteristics such as approval, process fitting, seal, measuring range etc.

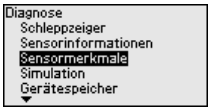

Simulation

In this menu item you can simulate measured values via the current output. This allows the signal path to be tested, e.g. through downstream indicating instruments or the input card of the control system.

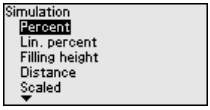

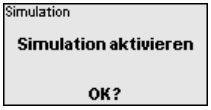

Select the requested simulation variable and set the requested value.

Caution:
During simulation, the simulated value is output as 4 … 20 mA current value and as digital HART signal. The status message within the context of the asset management function is "*Maintenance*".

Note:
The sensor terminates the simulation automatically after 60 minutes.

To deactivate the simulation manually in advance, you have to push the ***[ESC]*** key and confirm the message with the ***[OK]*** key.

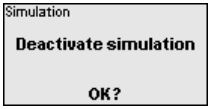

Device memory

The menu item Device memory offers the following functions:

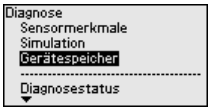

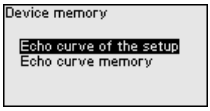

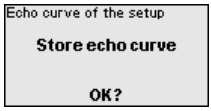

Echo curve of the setup:
With the function "*Echo curve of the setup*" it is possible to store the echo curve at the time of the setup. Storage should be carried out at the lowest possible level.

Note:
This is generally recommended, even mandatory, for using the asset management functionality.

Echo curve memory:
The function "*Echo curve memory*" allows up to ten individual echo curves to be stored, for example to detect the measurement behaviour of the sensor in different operating conditions.

With the adjustment software PACTware and the PC, the stored echo curves can be displayed with high resolution and used to recognize signal changes over time. In addition, the echo curve saved during setup can also be displayed in the echo curve window and compared with the current echo curve.

9.4.7 Special parameters

SP01 - Activate measuring range start limiting

Measuring range start limiting is activated here. The appropriate distance value is set in the special parameter SP02.

→ Jumps in the measured value to a changing false signal in the close range can thus be prevented.

Note:
However, activation also means that the sensor no longer accepts the level echo in the event of overfilling above the measuring range begin. A measured value jump to a multiple echo may occur here.

SP02 - Manual limitation of the measuring range begin

Here, an individual limitation of the measuring range begin takes place independent of the 100 % adjustment. The entered distance value in "*m*" must always be between the sensor reference point and the maximum level.

→ Echoes between the sensor reference point and this value will not be detected.

SP03 - Reliability on the vessel bottom resp. the measuring range

This is an additional distance value "*m*" that is added to the special parameter SP24 to reliably detect the zero point in case of insufficient reflections at the bottom of the vessel.

→ The echo detection below the 0 % adjustment is intended to support the reliable detection of an echo when the vessel is completely empty.

SP04 - Correction of the propagation speed

This parameter in "%" is used for correction of a running time shift or a modified spreading speed of the radar signal.

MAN 1000602417 EN Version: C Status: RL (released | freigegeben) printed: 26.06.2026

1026255-EN-260316

MAN 1000602417 EN Version: RL (released | freigegeben) printed: 06.06.2026

→ This compensates for measurement deviations due to longer distances in standpipes or a higher permittivity of the atmosphere in the vessel (e.g. for gases and vapours especially at high pressures).

SP05/06 - Factor for noise averaging rising/falling

The noise averaging is a temporal, floating average value formation of all signals received by the sensor. The set factor determines the number of averaged echo curves as a Basis 2 exponent (example: factor 2 corresponds to the averaging of 2^2 [= 4] echo curves).

→ Used for false signals caused by sporadic echoes, e.g. from agitator blades. The false signals are given a lower relevance or amplitude by a larger value of SP05. They are thus more strongly suppressed in their evaluation.

→ Use for level echoes with changing amplitude, e.g. due to a turbulent medium surface. The level echoes receive a greater relevance or constant amplitude through a larger value of SP06. They are thus increased in their evaluation.

Note:
A higher factor for noise averaging can lead to a longer reaction time or a delay of the measured value update.

SP07 - Deactivate filter function "Smooth raw value curve"

This parameter is always switched on ex-factory. It acts as a digital filter over the raw value curve depending on the selected application.

→ In principle, it causes an improvement in measurement reliability.

Note:
Therefore, switching off only makes sense in very special applications that need to be clarified.

SP08 - Offset detection curve for echo analysis

The detection curve runs above the echo curve with a defined distance (offset). Only the echoes that exceed the detection curve are detected and processed.

This special parameter in "*dB*" influences the sensitivity of the device against all echoes in the measuring range.

→ An increase of the dB value reduces the sensitivity of the echo detection and signal analysis.

Note:
This affects the level echo to the same extent. Therefore, the application is only used with very strong false signals and simultaneously good reflection properties of the medium.

SP09 - Minimum measurement reliability for level echo selection

The measurement reliability is the difference between echo amplitude and detection curve. This parameter defines the required min. measurement reliability in "*dB*" an echo must have within the focussing range to be accepted as level echo.

→ By entering a minimum measurement reliability, false signals below this value are not accepted as a level echo.

MAN 1000602417 EN Version: C Status: RL (released | freigegeben) printed: 26.06.2026

SP10 - Additional reliability of false signal storage

This parameter increases the already created false signal suppression by the input value in "*dB*" over the entire, stored false signal range. It is used when it is expected that false signals such as those from product buildup, condensate formation or agitators will increase in amplitude.

→ An increase of the value avoids that such a false signal is accepted as level echo.

Note:
An increase is useful for very heavily fluctuating or amplitude-increasing false signals. It is advised against reducing the value of the default setting.

SP12 - Activate "Summarize echoes" function

This function is used to activate and select the function "*Summarize echoes*". It consists of the single parameters "*SP13*" and "*SP14*".

→ This helps to suppress measured value jumps resulting from material cones or emptying hoppers in bulk solids applications when filling and emptying.

SP13 - Amplitude difference in "Summarize echoes" function

This parameter in "*dB*" determines how great the maximum amplitude difference between two adjacent echoes may be in order to summarize them.

SP14 - Echo distance for "Summarize echoes" function

This parameter in "*m*" entered here determines how great the distance between the end of the first echo and the start of the second echo may be at the maximum in order for them to be summarized.

SP15 - Activate "First large echo" function

When this parameter is activated, the first echo not saved as a false echo with sufficiently great amplitude is selected as a product echo.

→ This is useful for very large multiple reflections by e.g. a round vessel lid.

SP16 - Minimum amplitude "First large echo"

This parameter in "*dB*" determines how much smaller the useful echo amplitude may be compared to the largest echo so that it is evaluated as the first large echo and thus as a product echo

→ Up to this value, a relatively weak reflection signal of the medium is thus output as a measured value.

SP17 - Wide focussing range

This parameter determines the measuring window width "*m*" around the currently measured level echo. Only within this focusing range are changes (location, amplitude, number of echoes) accepted for evaluating the current level.

→ If this value is increased, very rapid level changes, e.g. due to collapsing material heaps or surge-like filling/emptying, are accepted even in an extended range.

SP18 - Minimum measurement reliability outside focussing range

The measurement reliability is the difference in "*dB*" between echo amplitude and detection curve. This parameter defines the required min. measurement reliability an echo must have outside the focussing range to be accepted as useful echo.

1026255-EN-260316

MAN 1000006024 EN Version: C Status: RL (released) printed: 26.06.2026

→ This is useful to obtain the measured value also in case of sporadic loss of the level signal, e. B. with foam generation.

SP19 - Time for opening the focussing range

If no more reflection can be detected within the focussing range, a measuring window opens. This parameter defines the time in "*s*" until it opens. This can be the case, for example, in the event of a level change without an evaluable reflection signal or in the event of an echo outside the focussing range with a greater useful echo probability.

→ As a result, on reaching this echo with high useful echo probability, this is evaluated as a useful echo and output as the current level.

SP22 - Measured value offset

The reference plane for the measurement with radar sensors is the lower edge of the flange or the sealing surface of the thread. The sensors are calibrated to this reference plane at the factory. This parameter enables an adaptation of this factory setting, e.g. to subsequently attached mounting facilities such as adapter flanges, threaded adapters, etc.

→ A possible offset error (constant error of the measured distance over the entire measuring range) is compensated for by this input.

SP24 - Factor for additional reliability at the measuring range end

This value in "%" is additional safety below the 0 % adjustment related to the measuring range.

→ It supports the detection of an echo when the vessel is completely empty, even with unfavourable vessel bottom shapes.

SP HART - HART signal

This parameter serves to activate/deaxctivate the HART signal in the output.

SP SIL - Safety Integrity Level function

This parameter serves to activate/deactivate the Safety Integrity Level function.

9.5 Save parameter adjustment data

On paper

We recommended writing down the adjustment data, e.g. in this instructions manual, and archiving them afterwards. They are thus available for multiple use or service purposes.

Display and adjustment module

If the instrument is equipped with a display and adjustment module, the parameter adjustment data can be saved therein. The procedure is described in menu item "*Copy device settings*".

MAN 1000602417 EN Version: C Status: RL (released | freigegeben) printed: 26.03.2026

10 Set up with Smartphone/tablet

10.1 Preparations

System requirements

Make sure that your smartphone/tablet meets at least the following system requirements:

- Operating system: iOS 13 or newer
- Operating system: Android 8.0 or newer
- Bluetooth 4.0 LE or newer

Download the adjustment app from the "*Apple App Store*", "*Google Play Store*" or "*Baidu Store*" to your smartphone or tablet.

Make sure that the Bluetooth function of the display and adjustment module is activated. For this, the switch on the bottom side must be set to "*On*". The default setting is "*On*".

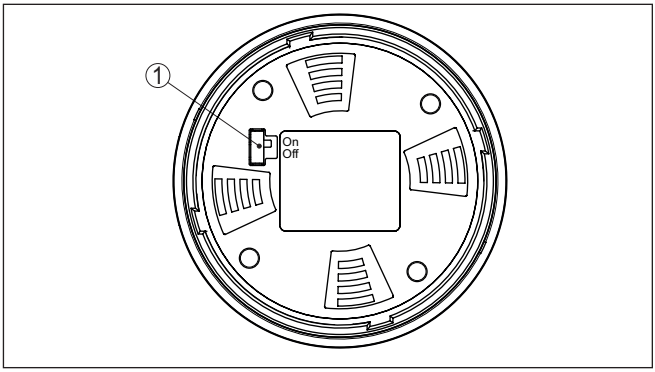

Fig. 53: Activate Bluetooth

1 Switch
On = Bluetooth active
Off = Bluetooth not active

10.2 Connecting

Connecting

Start the adjustment app and select the function "*Setup*". The smartphone/tablet searches automatically for Bluetooth-capable instruments in the area.

The message "*Connecting …*" is displayed.

The devices found are listed and the search is automatically continued.

Select the requested instrument in the device list.

Authenticate

When establishing the connection for the first time, the operating tool and the sensor must authenticate each other. After the first correct authentication, each subsequent connection is made without a new authentication query.

Enter Bluetooth access code

For authentication, enter the 6-digit Bluetooth access code in the next menu window. You can find the code on the information sheet "*Pins and Codes*" in the device packaging.

1026255-EN-260316

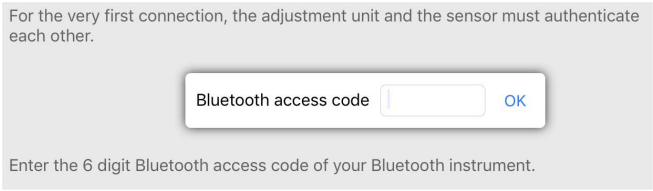

Fig. 54: Enter Bluetooth access code

Note:
If an incorrect code is entered, the code can only be entered again after a delay time. This time gets longer after each incorrect entry.

The message "*Waiting for authentication*" is displayed on the smartphone/tablet.

Connected

After connection, the sensor adjustment menu is displayed on the respective adjustment tool.

If the Bluetooth connection is interrupted, e.g. due to a too large distance between the two devices, this is displayed on the adjustment tool. The message disappears when the connection is restored.

Change device code

Parameter adjustment of the device is only possible if the parameter protection is deactivated or the adjustment released. When delivered, parameter protection is deactivated by default and can be activated at any time.

It is recommended to enter a personal 6-digit device code. To do this, go to menu "*Extended functions*", "*Access protection*", menu item "*Protection of the parameter adjustment*".

10.3 Parameter adjustment

Enter parameters

The sensor adjustment menu is divided into two areas, which are arranged next to each other or one below the other, depending on the adjustment tool.

- Navigation section
- Menu item display

The selected menu item can be recognized by the colour change.

Enter the requested parameters and confirm via the keyboard or the editing field. The settings are then active in the sensor.

Close the app to terminate connection.

MAN 1000602417 EN Version: C Status: RL (released | freigegeben) printed: 26.06.2026

1026255-EN-260316

11 Set up with PC/notebook

11.1 Preparations (Bluetooth)

System requirements

Make sure that your PC/notebook meets at least the following system requirements:

- Operating system: Windows 10
- DTM Collection
- Bluetooth 4.0 LE

Make sure that the Bluetooth function of the display and adjustment module is activated. For this, the switch on the bottom side must be set to "*On*". The default setting is "*On*".

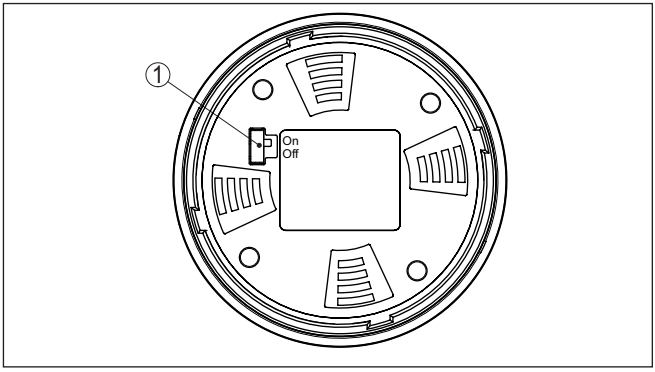

Fig. 55: Activate Bluetooth

1 Switch
On = Bluetooth active
Off = Bluetooth not active

Activate Bluetooth connection

Activate the Bluetooth connection via the project assistant.

Note:
Older systems do not always have an integrated Bluetooth LE. In these cases, a Bluetooth USB adapter is required. Activate the Bluetooth USB adapter using the Project Wizard.

After activating the integrated Bluetooth or the Bluetooth USB adapter, devices with Bluetooth are found and created in the project tree.

11.2 Connecting (Bluetooth)

Connecting

Select the requested device for the online parameter adjustment in the project tree.

Authenticate

When establishing the connection for the first time, the operating tool and the device must authenticate each other. After the first correct authentication, each subsequent connection is made without a new authentication query.

Enter Bluetooth access code

For authentication, enter in the next menu window the 6-digit Bluetooth access code:

MAN 1000602417 EN Version: C Status: RL (released | freigegeben) printed: 26.6.2026

1026255-EN-260316

CAN 1000602417 EN Version: C Status: RL (released | freigegeben) printed: 26.06.2026

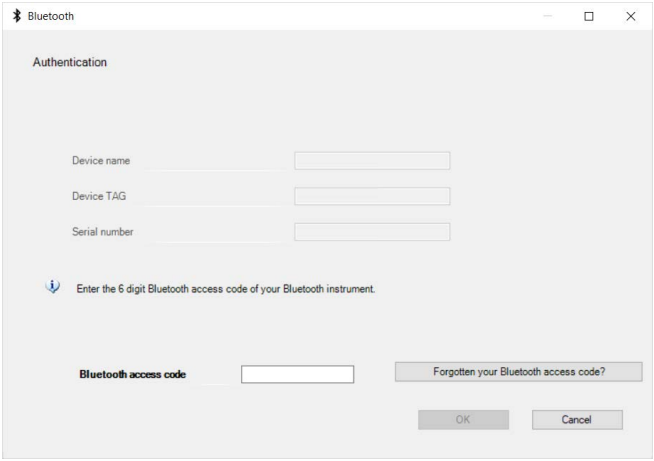

Fig. 56: Enter Bluetooth access code

You can find the code on the outside of the device housing and on the information sheet "*PINs and Codes*" in the device packaging.

Note:
If an incorrect code is entered, the code can only be entered again after a delay time. This time gets longer after each incorrect entry.

The message "*Waiting for authentication*" is displayed on the PC/notebook.

Connected

After connection, the device DTM appears.

If the connection is interrupted, e.g. due to a too large distance between device and adjustment tool, this is displayed on the adjustment tool. The message disappears when the connection is restored.

Change device code

Parameter adjustment of the device is only possible if the parameter protection is deactivated or the adjustment released. When delivered, parameter protection is deactivated by default and can be activated at any time.

It is recommended to enter a personal 6-digit device code. To do this, go to menu "*Extended functions*", "*Access protection*", menu item "*Protection of the parameter adjustment*".

11.3 Parameter adjustment

The further setup steps with detailed descriptions can be found in the online help of PACTware and the DTMs.

Note:
Keep in mind that for the setup of device, the current version of the DTM Collection must be used.

The latest DTM Collection and PACTware version can be downloaded free of charge via the Internet.

11.4 Save parameter adjustment data

It is recommended to document or save the parameter adjustment data. That way they are available for multiple use or service purposes.

MAN 1000602417 EN Version: C Status: RL (released | freigegeben) printed: 26.06.2026

1026255-EN-260316

12 Menu overview

12.1 Display and adjustment module

MAN 1000002417 EN Version: I Status: RS (released | freigegeben) printed: 26.06.2026

Lock/Unlock adjustment

Menu item	Parameter	Selection	Default setting
Lock/Unlock adjustment		Lock, unlock	SIL and Security: locked Neither SIL, nor Security: released

Setup

Menu item	Parameter	Selection	Default setting
Measurement loop name			Sensor
Distance unit	Distance unit	mm, m, in, ft	m
Type of medium	Type of medium	Liquid	Liquid[7]
		Bulk solid	Bulk solid[8]
Application	Liquid	Storage tank, agitator tank, dosing tank, standpipe, tank/collection basin, plastic tank (measurement through tank top), mobile plastic tank (IBC), level measurement in waters, flow measurement flume/overflow, pump station/pump shaft, combined sewer overflow, demonstration	Storage tank[9]
	Bulk solid	Silo, bunker, crusher, heap, demonstration	Silo[10]
Vessel height			Recommended meas. range, see chapter "*Technical data*"
Distance A (max. value)	Max. value		Max. adjustment 100 % corresponds to 0,000 m
Distance B (min. value)	Min. value		Min. adjustment 0 % corresponds to 120,000 m

[7] Plastic horn antenna, thread with integrated antenna system, flange with encapsulated antenna system
[8] Flange with lens antenna
[9] Plastic horn antenna, thread with integrated antenna system, flange with encapsulated antenna system
[10] Flange with lens antenna

Access protection

Menu item	Parameter	Selection	Default setting
Access protection	Bluetooth access code	Bluetooth access code	
	Protection of the parameterization	Protection of the parameterization	SIL and Security: activated Neither SIL, nor Security: deactivated
	Device code	Device code	

Reset

Menu item	Parameter	Selection	Default setting
Reset	Reset	Reset to factory settings, Restart	

Extended settings

Menu item	Parameter	Selection	Default setting
Temperature unit		°C, °F, K	°C
Damping	Integration time	0 … 999 s	0 s
Current output	Output value	Percent, linearized percent, filling height, distance, scaled, measurement reliability, electronics temperature, measuring rate, operating voltage	Percent
	Output characteristics	0 … 100 % correspond to 4 … 20 mA	0 … 100 % correspond to 4 … 20 mA
		0 … 100 % correspond to 20 … 4 mA	
	Current range	4 … 20 mA	4 … 20 mA
		3.8 … 20.5 mA	
	Reaction when malfunctions occur	≤ 3.6 mA, ≥ 21 mA, last valid measured value	≤ 3.6 mA
Linearisation	Linearization type - liquid	Linear, cylindrical tank, spherical tank, Venturi, trapezoidal weir, rectangular weir, Palmer-Bowlus flume, V-Notch, triangular overfall	Linear
	Linearization type - bulk solids	Linear, conical bottom, pyramid bottom, sloping bottom	Linear
	Intermediate height "h"		
Scaling	Scaling size	Scaling size (dimensionless, mass, volume, height, pressure, flow, others)	Volume
		Scaling unit (unit selection depending on scaling size, user-defined)	Litres
	Scaling format	#, #.#, #.##, #.###, #.####	#
	Scaling	Scaling	100 % correspond to 0 % correspond to

MAN 1000602417 EN Version: CStatus: RL released (freigegeben) printed: 26.06.2024

Menu item	Parameter	Selection	Default setting
Indication	Menu language	German, English, French, Spanish, Portuguese, Italian, Dutch, Russian, Chinese, Japanese, Turkish, Polish, Czech	Language is set with the first operation.
	Presentation	One measured value, measured value and bargraph, two measured values	One measured value
	Displayed values 1, 2	Percent, linearized percent, filling height, distance, scaled, measurement reliability, electronics temperature, current output, current output 2	Displayed value 1: Filling height Displayed value 2: Electronics temperature
	Backlight	On, Off	On
False signal suppression	False signal suppression	Create new, expand, delete all	
Date/Time	Date/Time	Date	Actual date
		Format: 24 h, 12 h	24 h
		Time	Actual time
HART mode	HART address	0 … 63	0
	Output mode	Analogue current output with HART, fix current (4 mA) with HART	Analogue current output with HART
Mode of operation	Mode of operation	Mode of operation 1: EU, Albania, Andorra, Azerbaijan, Australia, Belarus, Bosnia and Herzegovina, Canada, Egypt, Iceland, Liechtenstein, Moldavia, Monaco, Montenegro, Morocco, New Zealand, Northern Macedonia, Norway, San Marino, Saudi Arabia, Serbia, South-Africa, Switzerland, Turkey, Ukraine, United Kingdom, USA Mode of operation 2: Brazil, Japan, South Korea, Taiwan, Thailand Mode of operation 3: Chile, India, Malaysia, Zimbabwe Mode of operation 4: Russia, Kazakhstan	Mode of operation 1
	Voltage supply	Permanent voltage supply	Permanent voltage supply
		Not permanent voltage supply	
Copy instrument settings		Load from sensor Copy to sensor	
Special parameters	See separate menu overview at the end oc the chapter "*Menu overview*" of the operating instructions.		

MAN 1000602417 EN Version: C Status: RL (released | freigegeben) printed: 26.06.2026

Diagnostics

Menu item	Parameter	Selection/Display	Default setting
Diagnosis status	Diagnosis status	Diagnosis status	
		Change counter	
		Checksum (CRC) current	Date parameter adjustment
		Checksum (CRC) last SIL locking	Date last SIL locking
Echo curve		Echo curve	Indication of echo curve
Peak indicator	Distance	Current value, min. distance, max. distance	Actual value
	Measurement reliability	Current value, min. measurement reliability, max. measurement reliability	Actual value
	Measuring rate	Current value, min. meas. rate, max. meas. rate	Actual value
	Electronics temperature	Current value, min. eletronics temperature, max. electronics temperature	Actual value
	Operating voltage	Current value, min. operating voltage, max. operating voltage	Actual value
Diagnostic behaviour	Behaviour with echo loss	Last valid measured value, maintenance message, fault signal	Last valid measured value
	Time until fault signal	Time until fault signal	
Sensor information		Device name, serial number, hardware/ software version, device revision, factory calibration date	
Sensor characteristics			Configuration features
Simulation	Measured value	Percent, linearized percent, filling height, distance, scaled, measurement reliability, electronics temperature, measuring rate, operating voltage, current output, current output 2	Distance
Device memory	Echo curve of the setup	Save echo curve of setup	
	Echo curve memory	Echo curve memory	

12.2 Adjustment app and PACTware/DTM

Lock/Unlock adjustment

Menu item	Parameter	Selection	Default setting
Lock/Unlock adjustment		Lock, unlock	SIL and Security: locked Neither SIL, nor Security: released

MAN 1000602417 EN Version: C Status: RL (released | freigegeben) printed: 26.06.2025

MAN 1000052447 EN Version: G Status: RL (released | freigegeben) printed: 06.09.2022

Setup

Menu item	Parameter	Selection	Default setting
Measurement loop name			Sensor
Distance unit	Distance unit	mm, m, in, ft	m
Type of medium	Type of medium	Liquid	Liquid[11]
		Bulk solid	Bulk solid[12]
Application	Liquid	Storage tank, agitator tank, dosing tank, standpipe, tank/collection basin, plastic tank (measurement through tank top), mobile plastic tank (IBC), level measurement in waters, flow measurement flume/overflow, pump station/pump shaft, combined sewer overflow, demonstration	Storage tank[13]
	Bulk solid	Silo, bunker, crusher, heap, demonstration	Silo[14]
Vessel height			Recommended meas. range, see chapter "*Technical data*"
Distance A (max. value)	Max. value		Max. adjustment 100 % corresponds to 0,000 m
Distance B (min. value)	Min. value		Min. adjustment 0 % corresponds to 120,000 m

Access protection

Menu item	Parameter	Selection	Default setting
Access protection	Bluetooth access code	Bluetooth access code	
	Protection of the parameterization	Protection of the parameterization	
	Device code	Device code	

Reset

Menu item	Parameter	Selection	Default setting
Reset	Reset	Reset to factory settings, Restart	

[11] Plastic horn antenna, thread with integrated antenna system, flange with encapsulated antenna system
[12] Flange with lens antenna
[13] Plastic horn antenna, thread with integrated antenna system, flange with encapsulated antenna system
[14] Flange with lens antenna

Extended settings

Menu item	Parameter	Selection	Default setting
Units	Temperature unit of the instrument	°C, °F	°C
Damping	Integration time	0 … 999 s	0 s
Current output	Output value	Percent, linearized percent, filling height, distance, scaled, measurement reliability, electronics temperature, measuring rate, operating voltage	Percent
	Initial value - Characteristic	Initial value - characteristics (4 mA)	4 mA correspond to
	Final value - Characteristic	End value - characteristics (20 mA)	20 mA correspond to
	Output characteristics	0 … 100 % correspond to 4 … 20 mA	0 … 100 % correspond to 4 … 20 mA
		0 … 100 % correspond to 20 … 4 mA	
	Current range	4 … 20 mA	4 … 20 mA
		3.8 … 20.5 mA	
	Reaction when malfunctions occur	≤ 3.6 mA, ≥ 21 mA, last valid measured value	≤ 3.6 mA
	Reaction when malfunctions occur	≤ 3.6 mA, ≥ 21 mA	≤ 3.6 mA
Linearisation	Linearization type - liquid	Linear, cylindrical tank, spherical tank, Venturi, trapezoidal weir, rectangular weir, Palmer-Bowlus flume, V-Notch, triangular overfall	Linear
	Linearization type - bulk solids	Linear, conical bottom, pyramid bottom, sloping bottom	Linear
	Intermediate height "h"		
Scaling	Scaling size	Dimensionless, mass, volume, height, pressure, flow, others	Volume
	Scaling unit	Unit selection depending on scaling size, user-defined	Litres
	Name of the unit		
	Scaling format	#, #.#, #.##, #.###, #.####	#
	Scaling	100 % correspond to	100 L
		0 % correspond to	0 L

MAN 1000602417 EN Version: C Status: RL (released | freigegeben) printed: 26.06.2024

1026255-EN-260316

Menu item	Parameter	Selection	Default setting
Indication	Menu language (adjustment module)	German, English, French, Spanish, Portuguese, Italian, Dutch, Russian, Chinese, Japanese, Turkish, Polish, Czech, Turkish	Order-specific
	Presentation	One measured value, measured value and bargraph, two measured values	One measured value
	Displayed values 1, 2	Percent, linearized percent, filling height, distance, scaled, measurement reliability, electronics temperature, current output, current output 2	Displayed value 1: Filling height Displayed value 2: Electronics temperature
	Backlight	On, Off	On
False signal suppression	False signal suppression	Create new, extend, delete area, delete all	
HART variables	HART variables	Primary Value (PV)	Linearized percent
		Secondary Value (SV)	Distance
		Tertiary Value (TV)	Measurement reliability
		Quarternary Value (QV)	Electronics temperature
		LONG-TAG	
		MESSAGE	MSG
Date/Time	Date/Time	Date	Actual date
		Format: 24 h, 12 h	24 h
		Time	Actual time
Mode of operation	Mode of operation	Mode of operation 1: EU, Albania, Andorra, Azerbaijan, Australia, Belarus, Bosnia and Herzegovina, Canada, Egypt, Iceland, Liechtenstein, Moldavia, Monaco, Montenegro, Morocco, New Zealand, Northern Macedonia, Norway, San Marino, Saudi Arabia, Serbia, South-Africa, Switzerland, Turkey, Ukraine, United Kingdom, USA Mode of operation 2: Brazil, Japan, South Korea, Taiwan, Thailand Mode of operation 3: Chile, India, Malaysia, Zimbabwe Mode of operation 4: Russia, Kazakhstan	Mode of operation 1
	Energy supply	Permanent power supply, non-permanent power supply	Permanent voltage supply
Special parameters	See separate menu overview at the end of the chapter "*Menu overview*"		

MAN 1000002417 EN Version: C Status: RL (released | freigegeben) printed: 26.06.2026

1026255-EN-260316

Diagnostics

Menu item	Parameter	Selection/Display	Default setting
Status	Diagnosis status	Diagnosis status	
	Status parameter adjustment	Change counter, modification date, checksum (CRC) current, date checksum current, checksum (CRC) last SIL locking, date last SIL locking	
	Measured value status	Percent, linearized percent, filling height, distance, scaled, measurement reliability	
	Status outputs	Current output	
	HART Device Status	Field device malfunction, Configuration changed, Cold start, More status available, Analog output fixed, Analog output saturated, Non-primary variable of limits, Primary variable of limits	
	Status additional measured values	Electronics temperature, measuring rate, operating voltage	
Echo curve		Echo curve	Indication of echo curve
Peak indicator	Distance	Current value, min. distance, max. distance	Actual value
	Measurement reliability	Current value, min. measurement reliability, max. measurement reliability	
	Measuring rate	Current value, min. meas. rate, max. meas. rate	
	Electronics temperature	Current value, min. eletronics temperature, max. electronics temperature	
	Operating voltage	Current value, min. operating voltage, max. operating voltage	
Measured values	Measured values	Percent, linearized percent, filling height, distance, scaled, measurement reliability	
	Additional measured values	Electronics temperature, measuring rate, operating voltage	
	Outputs	Current output, Primary Value (PV), Secondary Value (SV), Tertiary Value (TV), Quarternary Value (QV)	
Diagnostic behaviour	Echo loss	Behaviour in case of echo loss, time until fault signal	Last valid measured value
	Electronics temperature - Behaviour outside the specification	Outside the specification, output fault current	
	Status signals	Activation of: Function control, Outside the specification, Maintenance required	Function check

MAN 1000602417 EN Version: C Status: RL (released | freigegeben) printed: 26.06.2024

1026255-EN-260316

Menu item	Parameter	Selection/Display	Default setting
Sensor information		Device name, order code, serial number, hardware/software version, Device Revision, factory calibration date, device address, Loop current mode, Fieldbus Profile Rev., Expanded Device Type, sensor acc. to SIL, sensor acc. to WHG, Bustype ID	
Sensor characteristics			Configuration features
Simulation	Measured value	Percent, linearized percent, filling height, distance, scaled, measurement reliability, electronics temperature, measuring rate, operating voltage, current output	Distance
Measured value memory (DTM)			
Device memory	Echo curve of the setup	Save echo curve of setup	
	Echo curve memory	Echo curve memory	
	Measured value memory	Measured value memory	
	Event memory	Event memory	
Function test		Start proof test, start device test	

12.3 Special parameters

Parameter	Designation	Presentation	Default setting
SP1, SP2	Activate measuring range start limiting Manual limiting of measuring range start	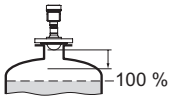	Deactivated 0.000 m
SP3	Safety on the vessel bottom or measuring range end		1.000 m
SP4	Correction of the propagation speed		0.0 %
SP5, SP6	Factor for noise averaging rising		2
	Factor for noise averaging falling		2
SP7	Deactivate filter function "*Smooth raw value curve*"	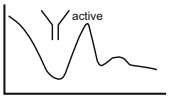	Deactivated

MAN 1000602417 EN Version: C Status: RL (released | freigegeben) printed: 26.06.2026

Parameter	Designation	Presentation	Default setting
SP08	Offset detection curve for echo analysis	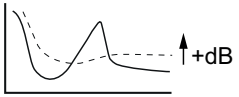	6 dB
SP09	Minimum measurement reliability for level echo selection	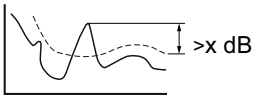	0 dB
SP10	Additional reliability for false signal storage	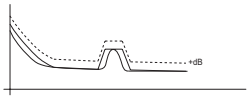	3 dB
SP12	Activate "*Summarize echoes*" function	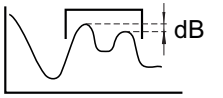	Deactivated
SP13	Amplitude difference in "*Summarize echoes*" function		12 dB
SP14	Echo distance for "*Summarize echoes*" function		0.500 m
SP15	Activate function measurement of the "*first large echo*"	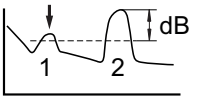	Deactivated
SP16	Minimum amplitude function "*First large echo*"		12 dB
SP17	Wide focussing range	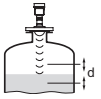	240 m
SP18	Minimum measurement reliability outside focussing range	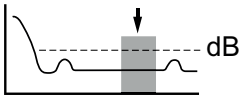	6 dB
SP19	Time for opening the focussing range		0 s
SP22	Measured value offset	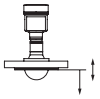	0.000 m
SP24	Factor for additional reliability at measuring range end		0.0 %
SP HART	Activate/Deactivate HART		Activated

MAN 1000002417 EN Version: C Status: RL (released | freigegeben) printed: 26.06.2026

Parameter	Designation	Presentation	Default setting
SIL	Activate/Deactivate SIL		Activated[15)] Deactivated[16)]

MAN 1000602417 EN Version: C Status: RL (released | freigegeben) printed: 26.06.2026

[15)] SIL versions
[16)] Non-SIL versions (cannot be activated)

MAN 1000602417 EN Version: C Status: RL (released | freigegeben) printed: 26.06.2026

13 Set up with other systems

13.1 DD adjustment programs

Device descriptions as Enhanced Device Description (EDD) are available for DD adjustment programs such as, for example, AMS™ and PDM.

13.2 Field Communicator 375, 475

Device descriptions for the instrument are available as EDD for parameterisation with Field Communicator 375 or 475.

Integrating the EDD into the Field Communicator 375 or 475 requires the "Easy Upgrade Utility" software, which is available from the manufacturer. This software is updated via the Internet and new EDDs are automatically accepted into the device catalogue of this software after they are released by the manufacturer. They can then be transferred to a Field Communicator.

In the HART communication, the Universal Commands and a part of the Common Practice Commands are supported.

1026255-EN-260316

14 Diagnostics and servicing

14.1 Maintenance

Maintenance

If the device is used properly, no special maintenance is required in normal operation.

Precaution measures against buildup

In some applications, buildup on the antenna system can influence the measuring result. Depending on the sensor and application, take measures to avoid heavy soiling of the antenna system. If necessary, clean the antenna system in certain intervals.

Cleaning

The cleaning helps that the type label and markings on the instrument are visible.

Take note of the following:

- Use only cleaning agents which do not corrode the housings, type label and seals
- Use only cleaning methods corresponding to the housing protection rating

14.2 Measured value and event memory

The instrument has several memories available for diagnostic purposes. The data remain there even in case of voltage interruption.

Measured value memory

Up to 100,000 measured values are stored in the sensor in a ring memory. Each entry contains date/time as well as the respective measured value.

Storable values are for example:

- Distance
- Filling height
- Percentage value
- Lin. percent
- Scaled
- Current value
- Measurement reliability
- Electronics temperature

When the instrument is shipped, the measured value memory is active and stores distance, measurement reliability and electronics temperature every 3 minutes.

The requested values and recording conditions are set via a PC with PACTware/DTM or the control system with EDD. Data are thus read out and also reset.

Event memory

Up to 500 events are automatically stored with a time stamp in the sensor (non-deletable). Each entry contains date/time, event type, event description and value.

Event types are for example:

- Modification of a parameter
- Switch-on and switch-off times

MAN 1000602417 EN Version: C Status: RL (released | freigegeben) printed: 26.06.2026

1026255-EN-260316

- Status messages (according to NE 107)
- Error messages (according to NE 107)

The data are read out via a PC with PACTware/DTM or the control system with EDD.

Echo curve memory

The echo curves are stored with date and time and the corresponding echo data.

Echo curve of the setup:
This is used as reference echo curve for the measurement conditions during setup. Changes in the measurement conditions during operation or buildup on the sensor can thus be recognized. The echo curve of the setup is stored via:

- PC with PACTware/DTM
- Control system with EDD
- Display and adjustment module

Further echo curves:
Up to 10 echo curves can be stored in a ring buffer in this memory section. Additional echo curves are stored via:

- PC with PACTware/DTM
- Control system with EDD

14.3 Asset Management function

The instrument features self-monitoring and diagnostics according to NE 107 and VDI/VDE 2650. In addition to the status messages in the following tables there are more detailed error messages available under the menu item "*Diagnostics*" via the respective adjustment module.

Status messages

The status messages are divided into the following categories:

- Failure
- Function check
- Out of specification
- Maintenance required

and explained by pictographs:

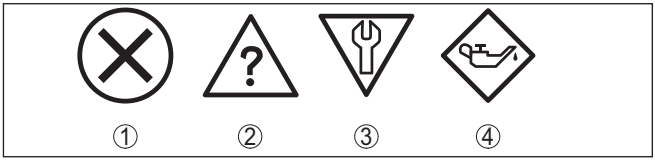

Fig. 57: Pictographs of the status messages

1 Failure - red
2 Out of specification - yellow
3 Function check - orange
4 Maintenance required - blue

MAN 1000602417 EN Version: C Status: RL (released | freigegeben) printed: 26.06.2026

1026255-EN-260316

MAN 1000052417 EN Version: C Status: RL (released | freigegeben) printed: 26.06.2026

Failure:
Due to a malfunction in the instrument, a fault signal is output.

This status message is always active. It cannot be deactivated by the user.

Function check:
The instrument is being worked on, the measured value is temporarily invalid (for example during simulation).

This status message is inactive by default.

Out of specification:
The measured value is unreliable because an instrument specification was exceeded (e.g. electronics temperature).

This status message is inactive by default.

Maintenance required:
Due to external influences, the instrument function is limited. The measurement is affected, but the measured value is still valid. Plan in maintenance for the instrument because a failure is expected in the near future (e.g. due to buildup).

This status message is inactive by default.

Failure

Code Text message	Cause	Rectification	DevSpec State in CMD 48
F113 No measured value available	Sensor does not detect an echo during operation Antenna system dirty or defective	Check or correct installation and/or parameter settings Clean or exchange process component or antenna	Byte 5, Bit 0 of Byte 0 … 5
F017 Adjustment span too small	Adjustment not within specification	Change adjustment according to the limit values (difference between min. and max. ≥ 10 mm)	Byte 5, Bit 1 of Byte 0 … 5
F025 Error in the linearization table	Values are not continuously rising, for example illogical value pairs	Check linearization table Delete table/Create new	Byte 5, Bit 2 of Byte 0 … 5
F036 No operable software	Failed or interrupted software update	Repeat software update Check electronics version Exchanging the electronics Send instrument for repair	Byte 5, Bit 3 of Byte 0 … 5
F040 Error in the electronics	Hardware defect	Exchanging the electronics Send instrument for repair	Byte 5, Bit 4 of Byte 0 … 5
F080 General software error	General software error	Disconnect operating voltage briefly	Byte 5, Bit 5 of Byte 0 … 5

1026255-EN-260316

Code Text message	Cause	Rectification	DevSpec State in CMD 48
F105 Determine measured value	The instrument is still in the switch-on phase, the measured value could not yet be determined	Wait for the end of the switch-on phase Duration up to approx. 3 minutes depending on the version and parameter settings	Byte 5, Bit 6 of Byte 0 … 5
F113 Communication error	EMC interference	Remove EMC influences	Byte 4, Bit 4 of Byte 0 … 5
F125 Impermissible electronics temperature	Temperature of the electronics in the non-specified range	Check ambient temperature Insulate electronics Use instrument with higher temperature range	Byte 5, Bit 7 of Byte 0 … 5
F260 Error in the calibration	Error in the calibration carried out in the factory Error in the EEPROM	Exchanging the electronics Send instrument for repair	Byte 4, Bit 0 of Byte 0 … 5
F261 Error in the instrument settings	Error during setup False signal suppression faulty Error when carrying out a reset	Repeat setup Carry out a reset	Byte 4, Bit 1 of Byte 0 … 5
F264 Installation/Setup error	Adjustment not within the vessel height/measuring range Max. measuring range of the instrument not sufficient	Check or correct installation and/or parameter settings Use an instrument with bigger measuring range	Byte 4, Bit 2 of Byte 0 … 5
F265 Measurement function disturbed	Sensor no longer carries out a measurement Operating voltage too low	Check operating voltage Carry out a reset Disconnect operating voltage briefly	Byte 4, Bit 3 of Byte 0 … 5
F267 No executable sensor software	Sensor cannot start	Exchanging the electronics Send instrument for repair	-
F268 False signal suppression not valid	False signal suppression was applied under other measuring conditions	Create a new false signal suppression	
	No false signal suppression available	Create a new false signal suppression	
F269 Measurement function insecure	Measurement reliability of the level echo too low (change to another echo pending)	Check or correct installation and/or parameter settings	
	Amplitude difference level echo for false signal suppression too low (change to another echo pending)	Check or correct installation and/or parameter settings	
	Amplitude difference level echo to another echo too low (change to another echo pending)	Check or correct installation and/or parameter settings	

MAN 1000060247 EN Version: C Status: RL (released | freigegeben) Printed: 26.06.2020

MAN 1000021211 EN Version: C Status: RL (released | freigegeben) Printed: 16.06.2020

Function check

Code Text message	Cause	Rectification	DevSpec State in CMD 48
C700 Simulation active	A simulation is active	Finish simulation Wait for the automatic end after 60 mins.	"Simulation Active" in "Standardized Status 0"

Out of specification

Code Text message	Cause	Rectification	DevSpec State in CMD 48
S600 Impermissible electronics temperature	Temperature of the processing electronics in the non-specified section	Check ambient temperature Insulate electronics Use instrument with higher temperature range	Byte 23, Bit 0 of Byte 14 … 24
S601 Overfilling	Level echo in the close range not available	Reduce level 100 % adjustment: Increase value Check mounting socket Remove possible interfering signals in the close range	Byte 23, Bit 1 of Byte 14 … 24
S603 Impermissible operating voltage	Operating voltage below specified range	Check electrical connection If necessary, increase operating voltage	

Maintenance

Code Text message	Cause	Rectification	DevSpec State in CMD 48
M600 Error during the reset "delivery status"	The data could not be restored during the reset to delivery status	Repeat reset Load XML file with sensor data into the sensor	Byte 24, Bit 0 of Byte 14 … 24
M601 Error in the non-active linearisation table	Hardware error EEPROM	Exchanging the electronics Send instrument for repair	Byte 24, Bit 1 of Byte 14 … 24
M604 Error at a device interface	Hardware defect	Check connections Exchanging the electronics Send instrument for repair	Byte 24, Bit 4 of Byte 14 … 24
M605 No echo available	Sensor does not detect an echo during operation Antenna dirty or defective	Clean the antenna Use a more suitable antenna/ sensor Remove possible false echoes Optimize sensor position and orientation	Byte 24, Bit 5 of Byte 14 … 24
M606 Installation/Setup error	Error during setup	Check or correct installation and/ or parameter settings	Byte 24, Bit 6 of Byte 14 … 24

Code Text message	Cause	Rectification	DevSpec State in CMD 48
M507 Error in the instrument settings	Error during setup Error when carrying out a reset False signal suppression faulty	Carry out reset and repeat setup	Byte 24, Bit 7 of Byte 14 … 24

14.4 Echo curve

14.4.1 Overview

Via the adjustment software PACTware with a PC the echo curve of the connected sensor can be displayed under the menu item "*Diagnosis*".

The echo curve enables a detailed assessment of the characteristics of a level measurement with the LEVEL TRANSMITTER 8140.

The following chapters show the basic course of the echo curve and describe the menu functions.

14.4.2 Echo curve presentation and description

The desired individual curves are displayed on the screen in the "*Echo curve*" diagram. The toolbar above is used to control the presentation and navigation.

MAN 1000602417 EN Version: C Status: RL (released | freigegeben) printed: 26.06.2020

1026255-EN-260316

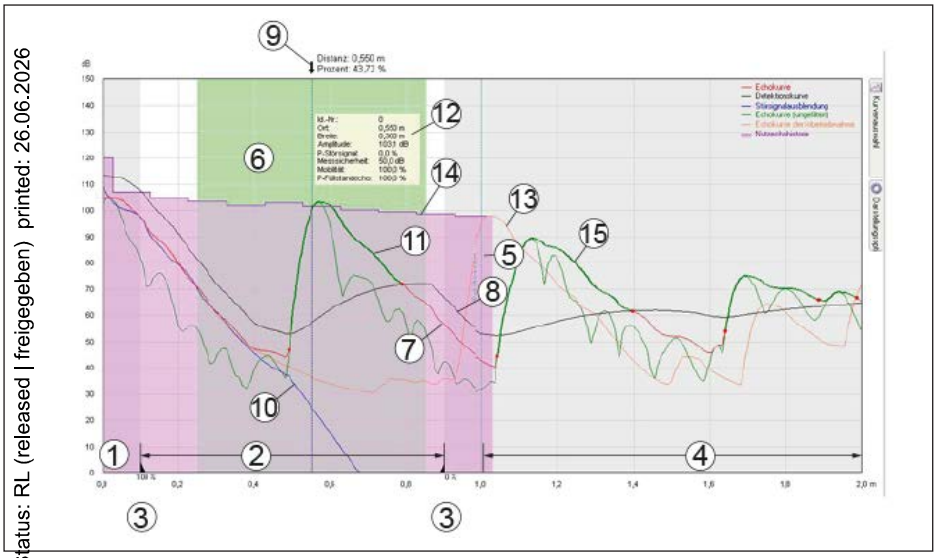

Fig. 58: Areas in the echo curve window

1 *Sensor reference plane (0 m)/Extended presentation area*
2 *Measuring range*
3 *Adjustment range*
4 *Safety area at the measuring range end*
5 *Vessel height*
6 *Focussing range*
7 *Echo curve*
8 *Detection curve*
9 *Distance and percentage value arrow*
10 *False signal suppression*
11 *Detected echo with initial and end point*
12 *Echo data of the selected echo*
13 *Echo curve of the setup*
14 *Useful echo history*
15 *Echo curve unfiltered*

MAN 1000024117 EN Version: G Status: RL (released | freigegeben) printed: 26.06.2026

1026255-EN-260316

MAN 1000602417 EN Version: C Status: RL (released | freigegeben) printed: 26.06.2026

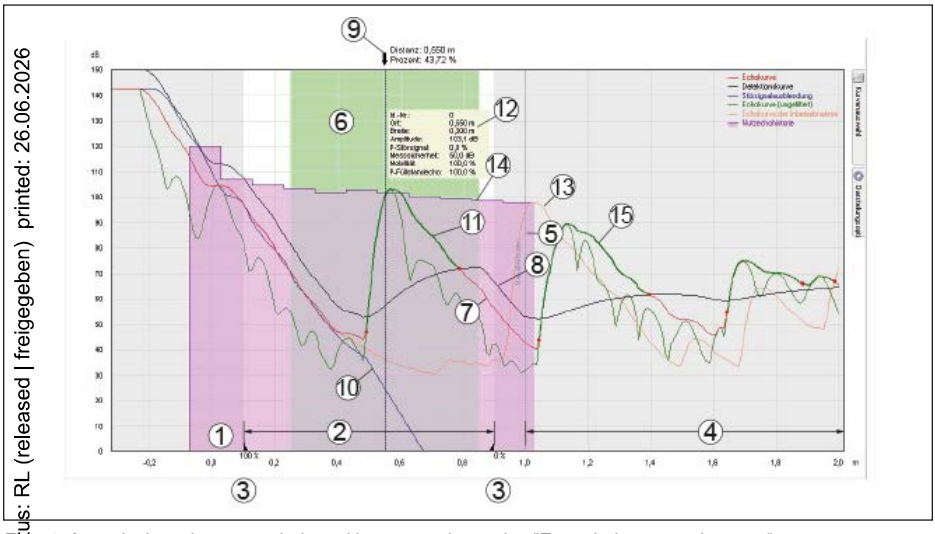

Fig. 59: Areas in the echo curve window with presentation option "Extended presentation area"

Distance and percentage value arrow

The distance arrow marks the level echo detected by the sensor. In the case of an ideal echo (flat, well-reflecting medium surface), it points to the centre of the echo.

→ A "*black*" arrow means: The level echo is currently visible to the sensor

→ A "*white*" arrow means: The level echo has disappeared from the marked point.

Echo curve

The echo curve shown in red is the basis for echo detection. It shows the course and amplitude of detected echoes.

→ Considered echoes are marked in green.

Detection curve

The detection curve shown in black follows the echo curve. It determines the sensitivity threshold of the sensor and thus in which range echoes are detected.

False signal suppression

The false signal suppression shown in blue represents the false signal profile stored in the sensor.

→ Echoes with an amplitude below this curve are marked as false signals.

Echo curve of the setup

A high-resolution echo curve stored by the user during setup.

→ It can be used to detect signal changes over the operating time.

High resolution

The maximum number of scanning points available in the sensor is displayed.

→ The high-resolution display of the echo curve is necessary for a meaningful assessment of the echo curve.

1026255-EN-260316

MAN 1000602417 EN Version: C Status: RL (released | freigegeben) printed: 26.06.2026

Extended presentation area

The entire reading area considered by the sensor, including all securities, is displayed.

→ The extended presentation area must be selected for a meaningful assessment of the echo curve.

Focussing range

The focussing range is a measuring window that the radar sensor places symmetrically around the distance of the currently measured level echo.

→ Only within the focussing range are changes (location, amplitude, number of echoes) accepted for evaluating the current level.

Echo data of the selected echo

Detected echoes within the measuring range are displayed by means of a green line and two red dots for echo start and end.

→ For each of these echoes, the echo data is determined.

Echo curve unfiltered

The green curve corresponds to the echo curve, but without upstream filter functions.

→ The unfiltered echo curve is not influenced by the application parameters.

Useful echo history

The curve shown in purple shows the minimum level echo amplitude depending on the distance with a resolution of 0.1 m.

14.4.3 Adjustment functions

Toolbar echo curve

In the upper left section, date and time of the actually shown curve are displayed. On the right, you can find the two toolbar symbols described below:

Symbol	Function	Additional information
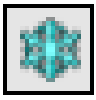	Hold curves: Freeze currently displayed curves, brighter presentation	Additional presentation of the currently read curve (changes in the curve are thus immediately recognisable)
	Standard view: Leaving the zoomed view, presentation of the unzoomed area	

Curve selection

The adjustment element "*Curve selection*" at the right edge in the window of the adjustment software PACTware enables the following curve views:

Designation	Additional information
Echo curve	Clicking with left mouse button on echo provides indication of associated echo data
Detection curve	
False signal suppression	
Echo curve unfiltered	Only visible in the service login
Useful echo history	

Designation	Additional information
Echo curve of the setup	

Presentation options

The adjustment element "*Presentation options*" at the right edge of the window enables the display of additional analysis aids:

Designation	Function	Additional information
High resolution	Loading and presenting the curves with the maximum number of measured value points	Slightly slower updating of the echo curve in the echo curve window due to the larger data volume
Extended presentation area	Presentation of additional distance safety areas of the sensor	
Focussing range	Measuring window that the sensor places symmetrically around the level echo.	
Show echo data	Tabular presentation of the echo data in the lower area of the window	

14.4.4 Additional functions and information

Additional adjustment options

The PACTware adjustment software offers additional adjustment options.

A click with the right mouse button in the echo curve opens a pop-up menu with these adjustment options:

Designation	Function
Zoom settings	Manual input of the desired zoom range
Unzoom	Leaving the zoomed presentation, presentation of the unzoomed area
Print view	Printing the echo curve and exporting it as a pdf file
Info	Display of information about the device from which the echo curves were recorded

Pressing and holding the mouse buttons in the echo curve results in further functions:

Designation	Function	Additional information
Right mouse button	Shifting	By shifting the mouse, the displayed presentation area is shifted as well.
Left mouse button	Zoom	Shifting the mouse sets the zoom range.

Additional information echo data

Below the echo curve, the detected echoes are listed in tabular form with additional information.

MAN 1000602417 EN Version: C Status: RL (released | freigegeben) printed: 26.6.2026

1026255-EN-260316

Designation	Meaning	Additional information
ID	Ident number assigned by the sensor to the detected echo	
Location	Distance from the sensor reference plane to the echo	
Amplitude	Echo amplitude of the respective echo in dB	
Width	Width of the respective echo	
P-false signal	False echo probability	Measure for the compliance of an echo with a stored false signal curve
Measurement reliability	Usable amplitude of an echo in dB	
Mobility	Indication of whether and how far the echo moves in a certain direction	-100 %: Certainly not moved; +100 % certainly moved sufficiently
P-level echo	Level echo probability	Level echo probability is the result of the echo assessment in the sensor

14.5 Rectify faults

Reaction when malfunction occurs

The operator of the system is responsible for taking suitable measures to rectify faults.

Fault rectification

The first measures are:

- Evaluation of fault messages
- Checking the output signal
- Treatment of measurement errors

A smartphone/tablet with the adjustment app or a PC/notebook with the software PACTware and the suitable DTM offer you further comprehensive diagnostic possibilities. In many cases, the causes can be determined in this way and the faults eliminated.

4 … 20 mA signal

Connect a multimeter in the suitable measuring range according to the wiring plan. The following table describes possible errors in the current signal and helps to eliminate them:

Error	Cause	Rectification
4 … 20 mA signal not stable	Fluctuating measured value	Set damping
4 … 20 mA signal missing	Electrical connection faulty	Check connection, correct, if necessary
	Voltage supply missing	Check cables for breaks; repair if necessary
	Operating voltage too low, load resistance too high	Check, adapt if necessary
Current signal greater than 22 mA, less than 3.6 mA	Sensor electronics defective	Replace device or send in for repair depending on device version

MAN 1000602497 EN Version: C Status: RL (released | freigegeben) printed: 26.06.2026

1026255-EN-260316

MAN 1000024747 EN Version: C Status: RL (released | freigegeben) printed: 26.06.2026

Treatment of measurement errors

The below tables show typical examples of application-related measurement errors with liquids. The measurement errors are differentiated according to the following:

- Constant level
- Filling
- Emptying

The images in column "*Error pattern*" show the real level as a broken line and the level displayed by the sensor as a continuous line.

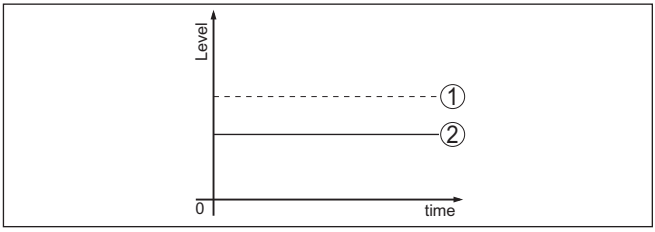

Fig. 60: Display of error images

1 Real level
2 Level displayed by the sensor

Note:
If the output level is constant, the cause could also be the fault setting of the current output to "*Hold value*".

If the level is too low, the reason could be a line resistance that is too high

Measurement error with constant level

Fault description	Cause	Rectification
Measured value shows a too low or too high level 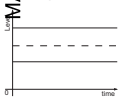	Min./max. adjustment not correct	Adapt min./max. adjustment
	Incorrect linearization curve	Adapt linearization curve
	Installation in a bypass tube or standpipe, hence running time error (small measurement error close to 100 %/large error close to 0 %)	Check parameter "Application" with respect to vessel form, adapt if necessary (bypass, standpipe, diameter).
Measured value jumps towards 0 % (liquids only) 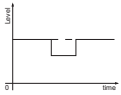	Multiple echo (vessel top, medium surface) with amplitude higher than the level echo.	Check parameter "Application", especially vessel top, type of medium, dished bottom, high dielectric constant, and adapt if necessary.

1026255-EN-260316

Fault description	Cause	Rectification
Measured value jumps towards 100 % 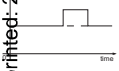	Due to the process, the amplitude of the level echo sinks A false signal suppression was not carried out	Carry out a false signal suppression
	Amplitude or position of a false signal has changed (e.g. condensation, buildup); false signal suppression no longer matches actual conditions.	Determine the reason for the changed false signals, carry out false signal suppression, e.g. with condensation.

Measurement error during filling

Fault description	Cause	Rectification
Measured value remains unchanged during filling 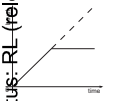	False signals in the close range too big or level echo too small Strong foam or vortex generation Max. adjustment not correct	Eliminate false signals in the close range Check measurement situation: Antenna must protrude out of the nozzle, installations Remove contamination on the antenna In case of interferences due to installations in the close range: Change polarisation direction Create a new false signal suppression Adapt max. adjustment
Measured value remains in the area of the bottom during filling 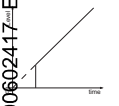	Echo from the tank bottom larger than the level echo, for example, with products with $\varepsilon_r < 2.5$ oil-based, solvents	Check parameters Medium, Vessel height and Floor form, adapt if necessary
Measured value remains momentarily unchanged during filling and then jumps to the correct level 	Turbulence on the medium surface, quick filling	Check parameters, change if necessary, e.g. in dosing vessel, reactor
Measured value jumps towards 0 % during filling 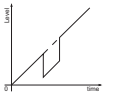	Amplitude of a multiple echo (vessel top - medium surface) is larger than the level echo.	Check parameter "Application", especially vessel top, type of medium, dished bottom, high dielectric constant, and adapt if necessary.
	The level echo cannot be distinguished from the false signal at a false signal position (jumps to multiple echo).	In case of interferences due to installations in the close range: Change polarisation direction Chose a more suitable installation position
	Transverse reflection from an extraction funnel, amplitude of the transverse reflection larger than the level echo	Direct sensor to the opposite funnel wall, avoid crossing with the filling stream.

BAN 1000602417 Version: C Status: RL (released | freigegeben) printed: 26.06.2020

Fault description	Cause	Rectification
Measured value fluctuates around 10 … 20 % (only bulk solids) 	Various echoes from an uneven medium surface, e.g. a material cone	Check parameter "Material Type" and adapt, if necessary Optimize installation position and sensor orientation
	Reflections from the medium surface via the vessel wall (deflection)	Select a more suitable installation position, optimize sensor orientation, e.g. with a swivelling holder
Measured value jumps towards 100 % during filling 	Due to strong turbulence and foam generation during filling, the amplitude of the level echo sinks. Measured value jumps to false signal.	Carry out a false signal suppression
Measured value jumps sporadically to 100 % during filling 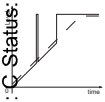	Varying condensation or contamination on the antenna.	Carry out a false signal suppression or increase false signal suppression with condensation/contamination in the close range by editing. With bulk solids, use radar sensor with purging air connection.
Measured value jumps to ≥ 100 % or 0 m distance 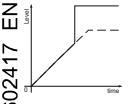	Level echo is no longer detected at close range due to foam generation or interference signals at close range.	Check measuring point: Antenna should protrude out of the threaded mounting socket, possible false echoes through flange socket. Remove contamination on the antenna Use a sensor with a more suitable antenna

Measurement error during emptying

Fault description	Cause	Rectification
Measured value remains unchanged in the close range during emptying 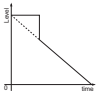	False signal larger than the level echo Level echo too small	Eliminate false signal in the close range. Check: Antenna must protrude from the nozzle. Remove contamination on the antenna In case of interferences due to installations in the close range: Change polarisation direction After eliminating the false signals, the false signal suppression must be deleted. Carry out a new false signal suppression.
Measured value jumps towards 0 % during emptying 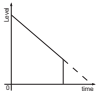	Echo from the tank bottom larger than the level echo, for example, with products with $\varepsilon_r < 2.5$ oil-based, solvents	Check parameters Medium type, Vessel height and Floor form, adapt if necessary

MAN 1000602417 EN Version: C Status: RL (released | freigegeben) printed: 26.06.2026

1026255-EN-260316

Fault description	Cause	Rectification
Measured value jumps sporadically towards 100 % during emptying	Varying condensation or contamination on the antenna	Carry out false signal suppression or increase false signal suppression in the close range by editing. With bulk solids, use radar sensor with purging air connection.
Measured value fluctuates around 10… 20 % (only bulk solids) 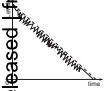	Various echoes from an uneven medium surface, e.g. an extraction funnel	Check parameter "Type of medium" and adapt, if necessary.
	Reflections from the medium surface via the vessel wall (deflection)	Optimize installation position and sensor orientation.

Reaction after fault rectification

Depending on the reason for the fault and the measures taken, the steps described in chapter "*Setup*" must be carried out again or must be checked for plausibility and completeness.

14.6 Exchanging the electronics module

If the electronics module is defective, it can be replaced by the user.

In Ex applications, only instruments and electronics modules with appropriate Ex approval may be used.

If there is no electronics module available on site, the electronics module can be ordered through the agency serving you. The electronics modules are adapted to the respective sensor and differ in signal output or voltage supply.

The new electronics module must be loaded with the default settings of the sensor. These are the options:

- In the factory
- Or on site by the user

In both cases, the serial number of the sensor is needed. The serial numbers are stated on the type label of the instrument, on the inside of the housing as well as on the delivery note.

When loading on site, the order data must first be downloaded from the Internet (see operating instructions "*Electronics module*").

Information:
All application-specific settings must be entered again. That's why you have to carry out a fresh setup after exchanging the electronics.

If you saved the parameter settings during the first setup of the sensor, you can transfer them to the replacement electronics module. A fresh setup is then not necessary.

MAN 1000602417 EN Version: C Status: RL (released | freigegeben) printed: 26.06.2026

1026255-EN-260316

MAN 1000602417 EN Version: C Status: RL (released | freigegeben) printed: 26.06.2026

14.7 Software update

The following components are required to update the instrument software:

- Instrument
- Voltage supply
- HART modem
- PC with PACTware/DTM
- Current instrument software as file

You can find the actual device software as well as detailed information of the procedure in the download area on our homepage: www.buerkert.com.

You can find information about the installation in the download file.

Caution:
Instruments with approvals can be bound to certain software versions. Therefore make sure that the approval is still effective after a software update is carried out.

You can find detailed information in the download area on our homepage: www.buerkert.com.

14.8 How to proceed if a repair is necessary

If a repair should be necessary, please contact your contact person.

1026255-EN-260316

15 Dismount

15.1 Dismounting steps

To remove the device, carry out the steps in chapters "*Mounting*" and "*Connecting to power suplly*" in reverse.

Warning:
When dismounting, pay attention to the process conditions in vessels or pipelines. There is a risk of injury, e.g. due to high pressures or temperatures as well as aggressive or toxic media. Avoid this by taking appropriate protective measures.

15.2 Disposal

Pass the instrument on to a specialised recycling company and do not use the municipal collecting points.

Remove any batteries in advance, if they can be removed from the device, and dispose of them separately.

If personal data is stored on the old device to be disposed of, delete it before disposal.

If you have no way to dispose of the old instrument properly, please contact us concerning return and disposal.

MAN 1000602417 EN Version: C Status: RL (released | freigegeben) printed: 26.06.2026

1026255-EN-260316

MAN 1000602417 EN Version: C Status: RL (released | freigegeben) printed: 26.06.2026

16 Certificates, approvals and certifications

16.1 Radio licenses

Radar:
The device has been tested and approved in accordance with the current edition of the applicable country-specific norms or standards.

The confirmations as well as regulations for use can be found in the document "*Information sheet Radio licenses*" supplied or on our homepage.

16.2 Approvals for Ex areas

Approved versions for use in hazardous areas are available or in preparation for the device or the device series.

You can find the relevant documents on our homepage.

16.3 Approvals as overfill protection

Approved versions for use as part of an overfill protection system are available or in preparation for the device or the device series.

The corresponding approvals can be found on our homepage.

16.4 Food and pharmaceutical certificates

Versions for use in the food and pharmaceutical industries are available or in preparation for the device or the device series.

The corresponding certificates can be found on our homepage.

16.5 Conformity

The device complies with the legal requirements of the applicable country-specific directives or technical regulations. We confirm conformity with the corresponding labelling.

The corresponding conformity declarations can be found on our homepage.

16.6 NAMUR recommendations

NAMUR is the automation technology user association in the process industry in Germany. The published NAMUR recommendations are accepted as the standard in field instrumentation.

The device fulfils the requirements of the following NAMUR recommendations:

- NE 21 – Electromagnetic compatibility of equipment
- NE 43 – Signal level for fault information from measuring transducers
- NE 53 – Compatibility of field devices and display/adjustment components
- NE 107 – Self-monitoring and diagnosis of field devices

For further information see www.namur.de.

1026255-EN-260316

16.7 IT Security

The device is available as version with IT security acc. to IEC 62443-4-2 or in preparation.

You can find the corresponding "*IT security guidelines*" as well as the certification and the "*Component Requirements*" on our homepage.

16.8 Safety Integrity Level (SIL)

The device is available as a version with SIL qualification according to IEC 61508 or is in preparation.

The corresponding certificate can be found on our homepage.

16.9 Material and test cerfificates

Comprehensive, accepted material and test certificates are configurable or in preparation for the device.

The corresponding documents are part of the order-specific scope of delivery when ordering.

MAN 1000602417 EN Version: C Status: RL (released | freigegeben) printed: 26.06.2026

1026255-EN-260316

17 Supplement

17.1 Technical data

Note for approved instruments

The technical data in the respective safety instructions which are included in delivery are valid for approved instruments (e.g. with Ex approval). These data can differ from the data listed herein, for example regarding the process conditions or the voltage supply.

All approval documents can be downloaded from our homepage.

Materials and weights

Materials, wetted parts

Plastic horn antenna	
– Adapter flange	PP-GF30 black
– Seal, adapter flange	FKM (SHS FPM 70C3 GLT), EPDM (COG AP310)
– Focussing lense	PP
Thread 316L with integrated antenna system	
– Process fitting	316L
– Antenna	PEEK
– Seal, antenna system	FKM (SHS FPM 70C3 GLT), FFKM (Kalrez 6230, Kalrez 6375 , Perlast G75B) EPDM (A+P 70.10-02)
– Process seal thread DIN 3852-A	Klingersil C-4400
Thread PVDF with integrated antenna system	
– Process fitting with antenna (consisting of one part)	PVDF
– Process seal thread DIN 3852-A	FKM
Flange with encapsulated antenna system	
– Flange plating, antenna encapsulation	PTFE, PFA
– Surface roughness	R_a < 0.8 µm
Horn antenna	
– Antenna horn	316L, 1.4848
– Impedance cone	Ceramic (99.7 % Al_2O_3)
– Seal up to +150 °C	FKM (A+P 70.16-06), EPDM (A+P 70.10-02)
– Seal up to +250 °C	FFKM (Kalrez 6375 , Perlast G75B)
– Seal up to +450 °C	Graphite
Hygienic fitting	
– Hygienic antenna encapsulation	PEEK
– Surface roughness metallic adapter	R_a < 0.76 µm
– Additional process seal depending on the hygienic fitting	FKM (PPE V70SW), FFKM (Kalrez 6230, Perlast G74S), EPDM (Freudenberg 291)
Flange with lens antenna	
– Process fitting	316L
– Antenna	PEEK

MAN 1000002417 EN Version: C Status: RL (released | freigegeben) printed: 26.06.2026

MAN 1000604 EN Version: C Status: RL (released | freigegeben | publié) printed: 26.04.2016

– Seal, antenna system	FKM (SHS FPM 70C3 GLT), FFKM (Kalrez 6375, G75B), EPDM (COG AP302)
Purging air connection	
– Flushing ring	PP-GFK
– O-ring seal, purging air connection	FKM (SHS FPM 70C3 GLT), EPDM (COG AP310)
– Reflux valve	316L
– Sealing, reflux valve	FKM (SHS FPM 70C3 GLT), EPDM (COG AP310)
Materials, non-wetted parts	
Mounting parts	
– Antenna cone, plastic horn antenna, compression flange	PBT-GF 30
– Mounting strap, fixing screws mounting strap	316L
– Fixing screws, adapter flange	304
Housing	316L
– Cable gland, blind plug cable gland	PA, stainless steel, brass
– Sealing, cable gland	CR/NBR
– Inspection window housing cover	Glass
– Ground terminal	316L
Weights	
– Instrument (depending on housing, process fitting and antenna)	approx. 2 … 17.2 kg (4.409 … 37.92 lbs)

Torques	
Max. torque, plastic horn antenna	
– Mounting screws, mounting strap on sensor housing	4 Nm (2.950 lbf ft)
– Flange screws, compression flange DN 80	5 Nm (3.689 lbf ft)
– Terminal screws, adapter flange - antenna	2.5 Nm (1.844 lbf ft)
– Flange screws, adapter flange DN 100	7 Nm (5.163 lbf ft)
Max. torque, horn antenna	
– Mounting screws	2.5 Nm (1.8 lbf ft)
Max. torque, thread with integrated antenna system	
– G¾	30 Nm (22.13 lbf ft)
– G1½	200 Nm (147.5 lbf ft)
– G1½ (with PTFE threaded adapter)	5 Nm (3.688 lbf ft)
Torque, flange with encapsulated antenna system	
– Required torque of the flange screws for standard flanges	60 Nm (44.25 lbf ft)
– Recommended torque for tightening the flange screws of standard flanges	60 … 100 Nm (44.25 … 73.76 lbf ft)

Max. torque, hygienic fittings	
– Flange screws DRD connection	20 Nm (14.75 lbf ft)
Max. torque, version flange with lens antenna	
– Terminal screws for swivelling holder	8 Nm (5.9 lbf ft)
Max. torque for NPT cable glands and Conduit tubes	50 Nm (36.88 lbf ft)
Torque housing locking	
– Recommended torque locking screw	1 Nm (1.475 lbf ft)
– Max. torque locking screw	2 Nm (0.738 lbf ft)

Input variable

Measured variable	The measured quantity is the distance between the end of the sensor antenna and the medium surface. The reference plane for the measurement and the usable measuring range are dependent on the antenna system.

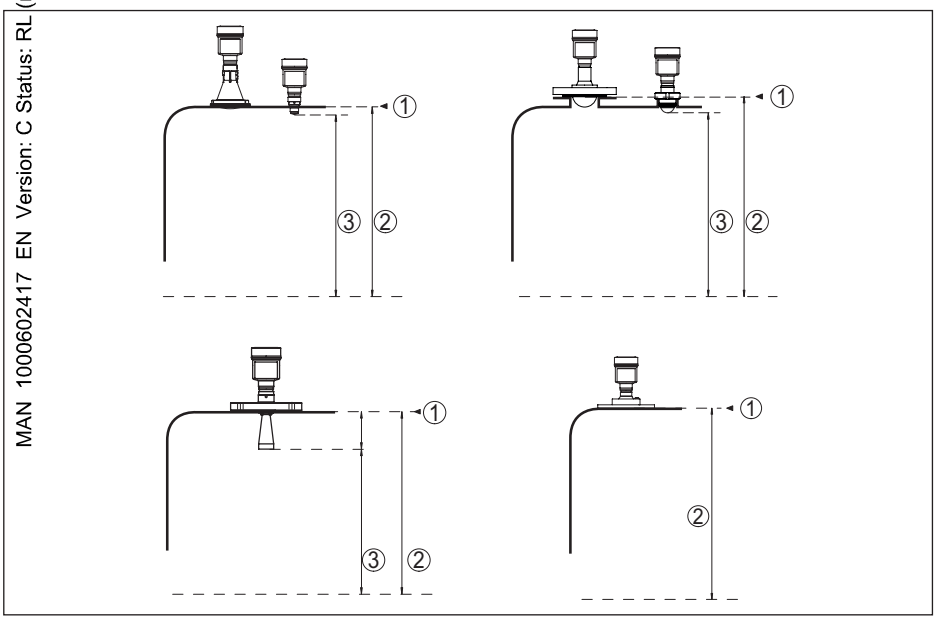

Fig. 61: Data of the input variable

1 Reference plane (depending on the antenna system)
2 Measured variable, max. measuring range
3 Utilisable measuring range (depending on the antenna version)

Max. measuring range	120 m (393.7 ft)

MAN 1000602417 EN Version: C Status: RL (released | freigegeben) printed: 16.06.2026

Recommended measuring range, depending on the antenna version and size[17)18)]

Antenna version	Size	Recommended measuring range up to
Plastic horn antenna	DN 80	120 m (393.7 ft)
Thread with integrated antenna system	G¾, ¾ NPT	10 m (32.81 ft)
Thread for hygienic adapter	G1, 1 NPT	20 m (65.62 ft)
	G1½, 1½ NPT	30 m (98.42 ft)
Flange with encapsulated antenna system, hygienic fittings	≥ DN 25	20 m (65.62 ft)
	≥ DN 50, 2"	30 m (98.42 ft)
	≥ DN 80, 3"	120 m (393.7 ft)
Horn antenna	ø 21 mm	10 m (32.81 ft)
	ø 26 mm	20 m (65.62 ft)
	ø 40 mm	30 m (98.42 ft)
	ø 48 mm	
	ø 75 mm	120 m (393.7 ft)
Flange with lens antenna	≥ DN 80, 3"	

blocking distance[19)]

– Modes of operation 1, 2, 4	0 mm (0 in)
– Mode of operation 3	≥ 250 mm (9.843 in)

Switch-on phase

Run-up time t (U_B ≥ 24 V DC)	≤ 15 s[20)]
Starting current for run-up time	≤ 3.6 mA

Output variable

Output signal	4 … 20 mA/HART
Range of the output signal	3.8 … 20.5 mA/HART (default setting)
Signal resolution	0.3 µA
Resolution, digital	1 mm (0.039 in)
Fault signal, current output (adjustable)	≤ 3.6 mA, ≥ 21 mA, last valid measured value
Max. output current	22 mA
Starting current	≤ 3.6 mA; ≤ 10 mA for 5 ms after switching on
Load	See load resistance under Power supply
Damping (63 % of the input variable), adjustable	0 … 999 s

17) With good reflection conditions, larger measuring ranges are also possible.
18) The specified values correspond to the default values on delivery.
19) Depending on the operating conditions
20) Reference conditions: U_B = 24 V DC, ambient temperature 20 °C (68 °F)

MAN 1000 6024 17 EN Version: C Status: RL (released | freigegeben) printed: 26.06.2026

1026255-EN-260316

MAN 1000602417 EN Version: C Status: RL (released | freigegeben) printed: 26.06.2026

HART output values according to HART 7.0[21]	
– PV (Primary Value)	Lin. percent
– SV (Secondary Value)	Distance
– TV (Third Value)	Measurement reliability
– QV (Fourth Value)	Electronics temperature
Fulfilled HART specification	7.6
Further information on Manufacturer ID, Device ID, Device Revision	See website of FieldComm Group

Deviation (according to DIN EN 60770-1)

Process reference conditions according to DIN EN 61298-1	
– Temperature	+18 … +30 °C (+64 … +86 °F)
– Relative humidity	45 … 75 %
– Air pressure	860 … 1060 mbar/86 … 106 kPa (12.5 … 15.4 psig)
Installation reference conditions[22]	
– Min. distance to internal installations	> 200 mm (7.874 in)
– Reflector	Flat plate reflector
– False reflections	Biggest false signal, 20 dB smaller than the useful signal
Deviation with liquids	≤ 1 mm (meas. distance > 0.25 m/0.8202 ft)
Non-repeatability[23]	≤ 1 mm
Deviation with bulk solids	The values depend to a great extent on the application. Binding specifications are thus not possible.

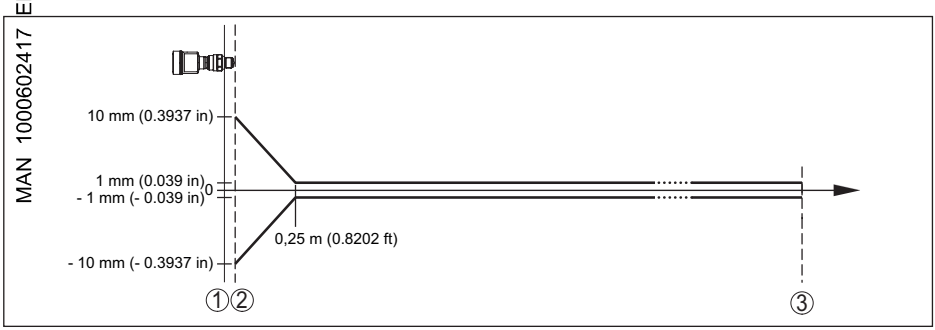

Fig. 62: Deviation under reference conditions (example: thread with integrated antenna system, applies accordingly to all versions)[24]

1 Reference plane
2 Antenna edge
3 Recommended measuring range

[21] Default values can be assigned individually.
[22] In case of deviations from reference conditions, the offset due to installation can be up to ± 4 mm. This offset can be compensated by the adjustment.
[23] Already included in the meas. deviation
[24] For operating mode 3 as well as with adjusted measuring range of more than 60 m: point 2 ± 20 mm, from 0.25 m ± 2 mm

MAN 1000024147 EN Version: C Status: RL (released | freigegeben) printed: 26.06.2026

Recommended min. distance for typical bulk solids applications[25)]

Plastic horn antenna, flange with lens antenna	250 mm (9.843 in)
Thread with integrated antenna system	500 mm (19.69 in)
blocking distance	150 mm (5.906 in)

Variables influencing measurement accuracy[26)]

Specifications apply to the digital measured value

Temperature drift	< 3 mm/10 K, max. 10 mm
Additional deviation through electromagnetic interference	< ±10 mm[27)]

Specifications apply also to the current output

Temperature drift	< 0.03 %/10 K or max. 0.3 % relating to the 16.7 mA span
Deviation in the current output due to digital/analogue conversion	< 15 µA
Additional deviation through electromagnetic interference	< ± 80 µA[28)]

Influence of the superimposed gas and pressure on measurement accuracy

The propagation speed of the radar impulses in gas or vapour above the medium is reduced by high pressure. This effect depends on the type of superimposed gas or vapour and is especially large at low temperatures.

The following table shows the resulting deviation for some typical gases and vapours. The specified values refer to the distance. Positive values mean that the measured distance is too large, negative values that the measured distance is too small.

Gas phase	Temperature	Pressure				
		1 bar (14.5 psig)	10 bar (145 psig)	50 bar (725 psig)	100 bar (1450 psig)	200 bar (2900 psig)
Air	20 °C/68 °F	0 %	0.22 %	1.2 %	2.4 %	4.9 %
	200 °C/392 °F	-0.01 %	0.13 %	0.74 %	1.5 %	3 %
	400 °C/752 °F	-0.02 %	0.08 %	0.52 %	1.1 %	2.1 %

[25)] Depending of the reflective properties of the measured media.
[26)] Determination of the temperature drift acc. to the limit point method
[27)] The specified measurement deviation of ±10 mm due to electromagnetic interference is used as test criteria for the EMC immunity tests and is therefore to be understood as maximum value.
[28)] The specified measurement deviation of ± 80 µA due to electromagnetic interference is used as test criteria for the EMC immunity tests and is therefore to be understood as maximum value.

MAN 1000602417 EN Version: C Status: RL (released | freigegeben) printed: 26.05.2026

Gas phase	Temperature	Pressure				
		1 bar (14.5 psig)	10 bar (145 psig)	50 bar (725 psig)	100 bar (1450 psig)	200 bar (2900 psig)
Hydrogen	20 °C/68 °F	-0.01 %	0.10 %	0.61 %	1.2 %	2.5 %
	200 °C/392 °F	-0.02 %	0.05 %	0.37 %	0.76 %	1.6 %
	400 °C/752 °F	-0.02 %	0.03 %	0.25 %	0.53 %	1.1 %
Steam (saturated steam)	100 °C/212 °F	0.26 %	-	-	-	-
	180 °C/356 °F	0.17 %	2.1 %	-	-	-
	264 °C/507 °F	0.12 %	1.44 %	9.2 %	-	-
	366 °C/691 °F	0.07 %	1.01 %	5.7 %	13.2 %	76 %

Characteristics and performance data

Radar signal	FMCW (Frequency-Modulated-Continuous-Wave)
Measuring frequency	W-band (80 GHz technology)
Measuring cycle time[29]	approx. 200 ms
Step response time[30]	≤ 3 s
Beam angle[31]	

Version	Larger antenna or process fitting	Beam angle	Liquid	Bulk solid
Plastic horn antenna	DN 80	3°	●	●
Thread with integrated antenna system	G¾, ¾ NPT	14°	●	–
	G1, 1 NPT	12°	●	–
	G1½, 1½ NPT (+250 °C)	12°	●	O
	G1½, 1½ NPT, G2, 2 NPT (+150 °C/+200 °C)	8°	●	O
	G1½, 1½ NPT (PVDF)	8°	●	O
Thread for hygienic adapter	G1, 1 NPT	13°	●	–
	G1½, 1½ NPT	8°	●	O
Flange with encapsulated antenna system, hygienic fittings	≥ DN 25	10°	●	–
	≥ DN 50, 2"	6°	●	O
	≥ DN 80, 3"	3°	●	O

[29] With operating voltage U_B ≥ 24 V DC

[30] Time span after a sudden distance change from 1 m to 5 m until the output signal reaches 90 % of the final value for the first time (IEC 61298-2). Valid with operating voltage U_B ≥ 24 V DC

[31] Outside the specified beam angle, the energy level of the radar signal is 50% (-3 dB) less.

1026255-EN-260316

Version	Larger antenna or process fitting	Beam angle	Liquid	Bulk solid
Horn antenna	ø 21 mm	11°	●	O
	ø 26 mm	10°	●	O
	ø 40 mm	7°	●	O
	ø 48 mm	6°	●	O
	ø 75 mm	3°	●	●
Flange with lens antenna	≥ DN 80, 3"	3°	O	●

● *Recommended, typical use*
O *Possible but not typical use*
– *Unintended use*

Emitted HF power (depending on the parameter setting)[32)]

- Average spectral transmission power density: -3 dBm/MHz EIRP
- Max. spectral transmission power density: +34 dBm/50 MHz EIRP
- Max. power density at a distance of 1 m: < 3 µW/cm²

Ambient conditions

Ambient, storage and transport temperature: -40 … +80 °C (-40 … +176 °F)

Process conditions - Temperature

For the process conditions, please also note the specifications on the type label. The lowest value (amount) always applies.

Version	Antenna material	Process seal	Process temperature (measured on the process fitting)
Plastic horn antenna	PP		-40 … +80 °C (-40 … +176 °F)
Thread with integrated antenna system 316L	PEEK	FKM (SHS FPM 70C3 GLT)	-40 … +150 °C (-40 … +302 °F)
			-40 … +200 °C (-40 … +392 °F)
		FFKM (Kalrez 6230)	-15 … +150 °C (5 … +302 °F)
			-15 … +250 °C (5 … +482 °F)
		FFKM (Kalrez 6375)	-20 … +150 °C (-4 … +302 °F)
			-20 … +250 °C (-4 … +482 °F)
		FFKM (Perlast G74S, G75B)	-15 … +150 °C (5 … +302 °F)
			-15 … +250 °C (5 … +482 °F)
		EPDM (A+P 70.10-02)	-55 … +150 °C (-67 … +302 °F)

[32)] EIRP: Equivalent Isotropic Radiated Power

MAN 1000021211 EN Version: C Status: RL (released | freigegeben) printed: 26.06.2026
1026255-EN-260316

Version	Antenna material	Process seal	Process temperature (measured on the process fitting)
Thread with integrated antenna system PVDF	PVDF	FKM	-40 … +80 °C (-40 … +176 °F)
Flange with encapsulated antenna system	PTFE, PTFE (8 mm)	PTFE	-60 … +150 °C (-76 … +302 °F)
			-196 … +200 °C (-321 … +392 °F)
	PFA (8 mm)	PFA	-60 … +150 °C (-76 … +302 °F)
			-60 … +200 °C (76 … +392 °F)
Hygienic fittings Thread for hygienic adapter	PEEK	PTFE (with Clamp connection)	-40 … +150 °C (-40 … +302 °F)
		FFKM (Kalrez 6230)	-15 … +150 °C (5 … +302 °F)
		FFKM (Perlast G74S)	-15 … +150 °C (5 … +302 °F)
		FKM (PPE V70SW)	-10 … +150 °C (-14 … +302 °F)
		EPDM (Freudenberg 291)	-20 … +150 °C (-4 … +302 °F)
Horn antenna	Antenna horn: 316L, impedance cone: PTFE	FFKM (Kalrez 6375)	-20 … +250 °C (-4 … +482 °F)
		FFKM (Perlast G75B)	-15 … +250 °C (5 … +482 °F)
		FKM (A+P 70.16-06)	-40 … +150 °C (-40 … +302 °F)
		EPDM (A+P 70.10-02)	-55 … +150 °C (-67 … +302 °F)
Horn antenna - High temperature	Antenna horn: 316L, impedance cone: ceramic (99.7 % Al_2O_3)	Graphite	-196 … +450 °C (-321 … +842 °F)
Flange with lens antenna	PEEK	FKM (SHS FPM 70C3 GLT)	-40 … +150 °C (-40 … +302 °F)
			-40 … +200 °C (-40 … +392 °F)
		FFKM (Kalrez 6375)	-20 … +150 °C (-4 … +302 °F)
			-20 … +250 °C (-4 … +482 °F)
		FFKM (Perlast G75B)	-15 … +150 °C (5 … +302 °F)
			-15 … +250 °C (5 … +482 °F)
		EPDM (COG AP302)	-40 … +150 °C (-40 … +302 °F)

SIP process temperature (SIP = Sterilization in place)

Applies to steam-suitable device configuration, i.e. flange with encapsulated antenna system or hygienic fitting.

Vapour stratification up to 2 h +150 °C (+302 °F)

MAN 1000024747 EN Version: C Status: RL (released | freigegeben) printed: 26.02.2016

1026255-EN-260316

Derating, ambient temperature

Plastic horn antenna

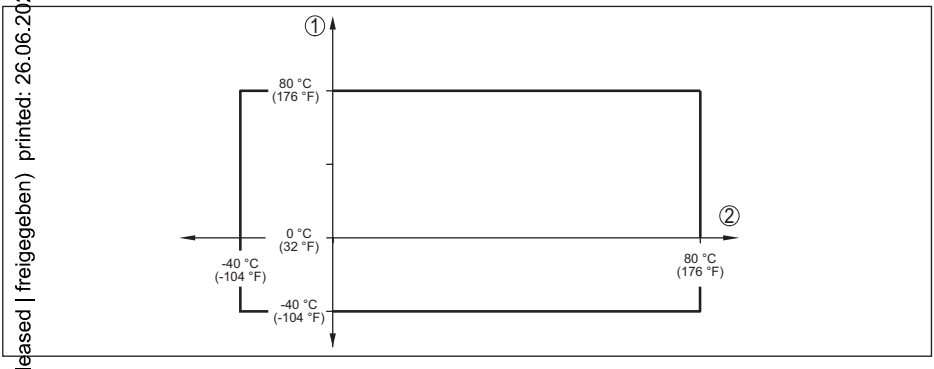

Fig. 63: Derating, ambient temperature, plastic horn antenna

1 Ambient temperature
2 Process temperature

Thread with integrated antenna system

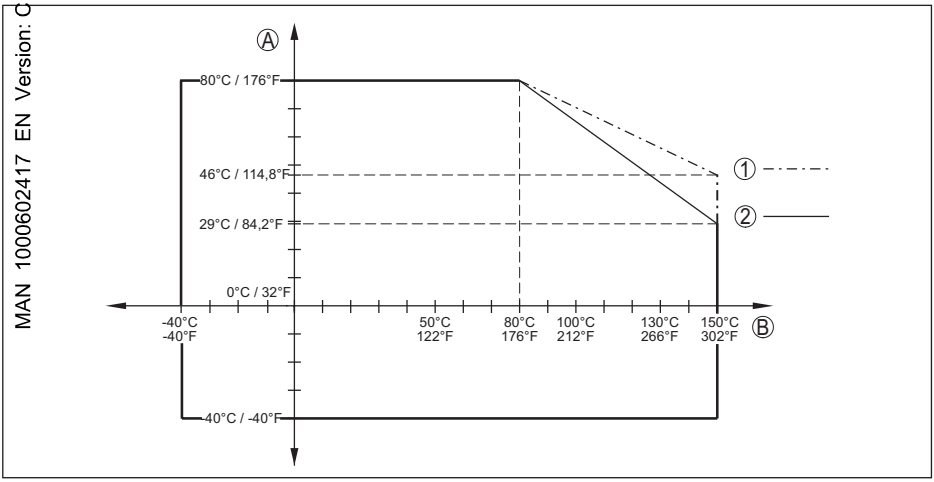

Fig. 64: Derating, ambient temperature, thread with integrated antenna system up to +150 °C (+302 °F)

A Ambient temperature
B Process temperature
1 Stainless steel housing - precision casting
2 Stainless steel housing - electropolished

MAN 1000602417 EN Version: C Status: RL (released | freigegeben) printed: 26.06.2024

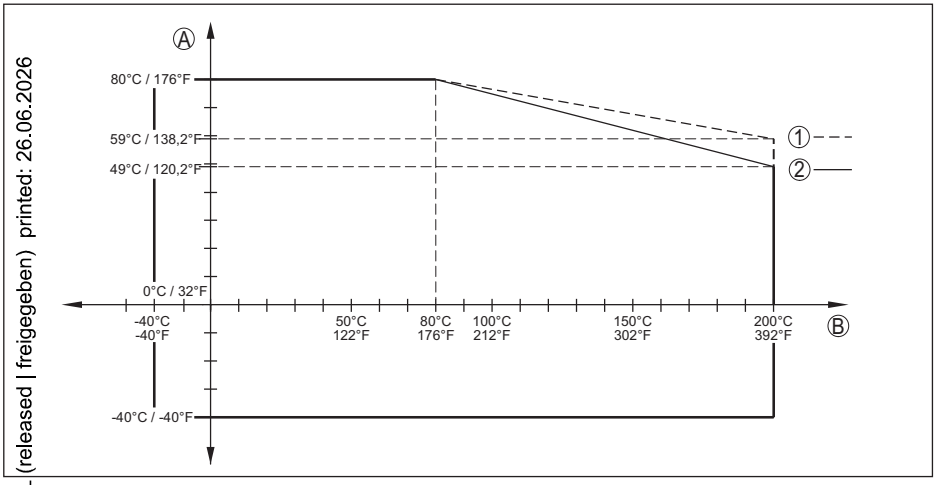

Fig. 65: Derating, ambient temperature, thread with integrated antenna system up to +200 °C (+392 °F)

A Ambient temperature
B Process temperature
1 Stainless steel housing - precision casting
2 Stainless steel housing - electropolished

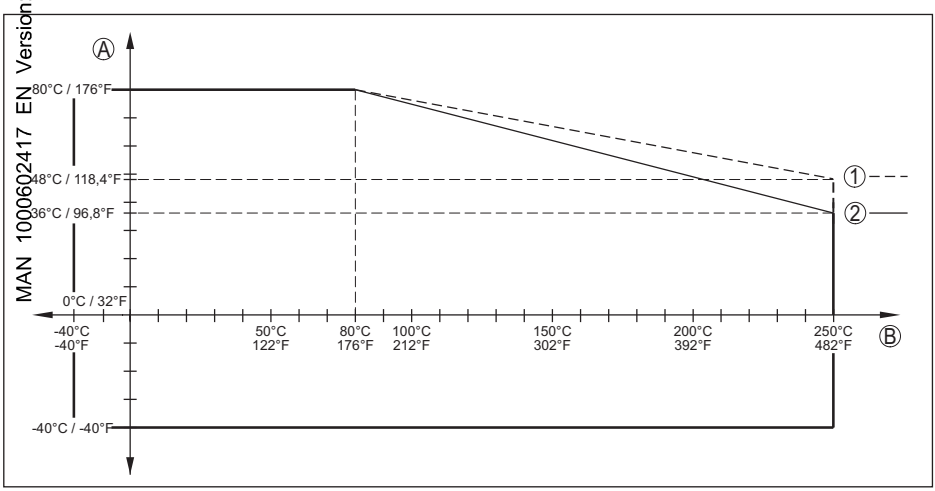

Fig. 66: Derating, ambient temperature, thread with integrated antenna system up to +250 °C (+482 °F)

A Ambient temperature
B Process temperature
1 Stainless steel housing - precision casting
2 Stainless steel housing - electropolished

MAN 1000602417 EN Version: C Status: RL (released | freigegeben) printed: 26.06.2026

Flange with encapsulated antenna system

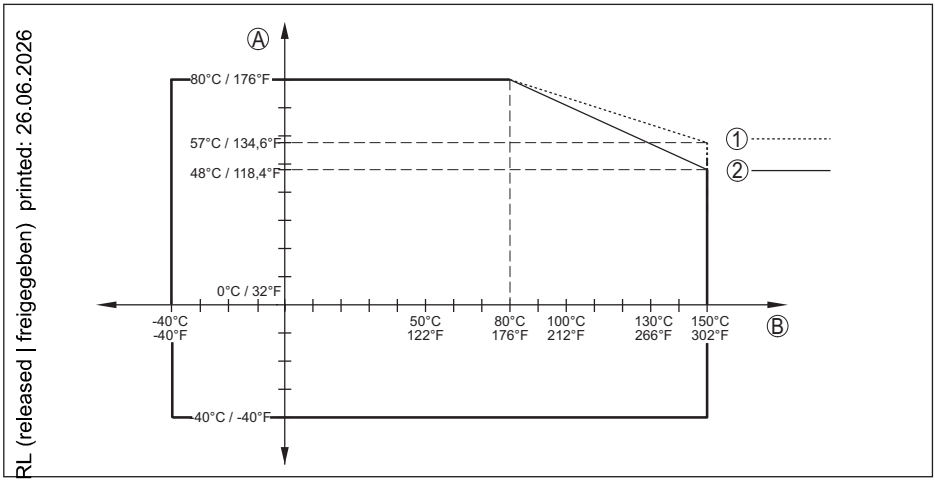

Fig. 67: Derating, ambient temperature, flange with encapsulated antenna system up to +150 °C (+302 °F)

A Ambient temperature
B Process temperature
1 Stainless steel housing - precision casting
2 Stainless steel housing - electropolished

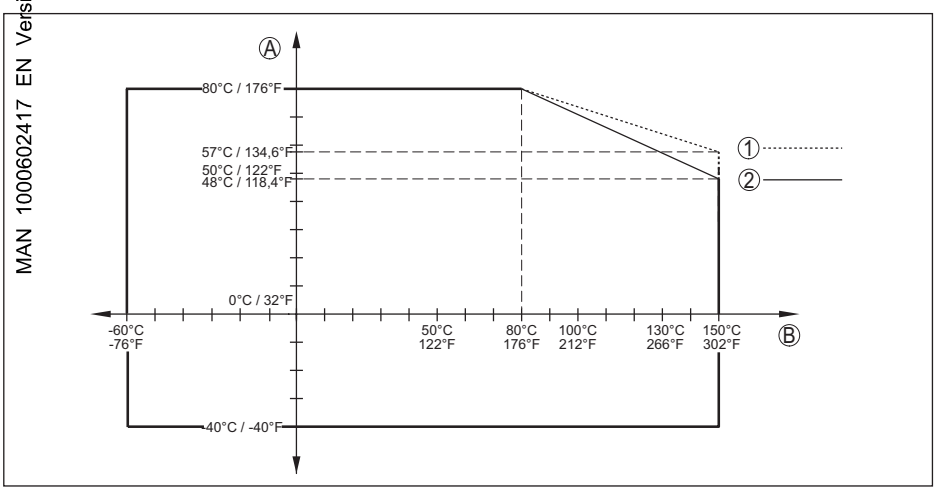

Fig. 68: Derating ambient temperature, flange with encapsulated antenna system -60 … +150 °C (-76 … +302 °F)

A Ambient temperature
B Process temperature
1 Stainless steel housing - precision casting
2 Stainless steel housing - electropolished

MAN 1000602417 EN Version: C Status: RL (released | freigegeben) printed: 26.06.2026

1026255-EN-260316

MAN 1000602417 EN Version: C Status: RL (released | freigegeben) printed: 26.06.2026

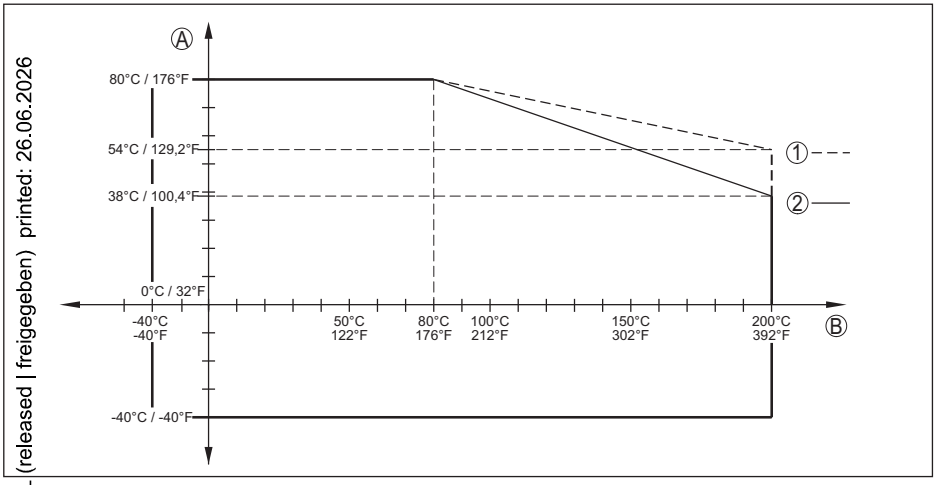

Fig. 69: Derating, ambient temperature, flange with encapsulated antenna system up to +200 °C (+392 °F)

A Ambient temperature
B Process temperature
1 Stainless steel housing - precision casting
2 Stainless steel housing - electropolished

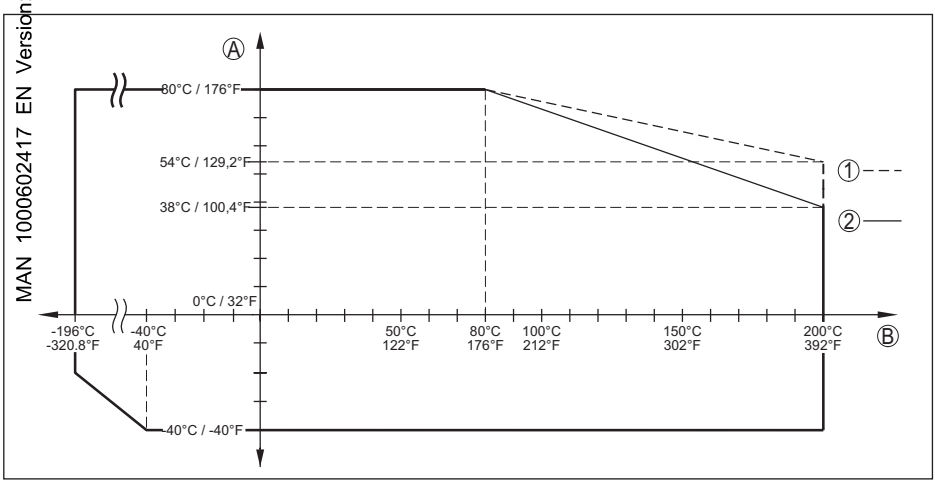

Fig. 70: Derating ambient temperature, flange with encapsulated antenna system -196 … +200 °C (-320.8 … +392 °F)

A Ambient temperature
B Process temperature
1 Stainless steel housing - precision casting
2 Stainless steel housing - electropolished

Flange with lens antenna

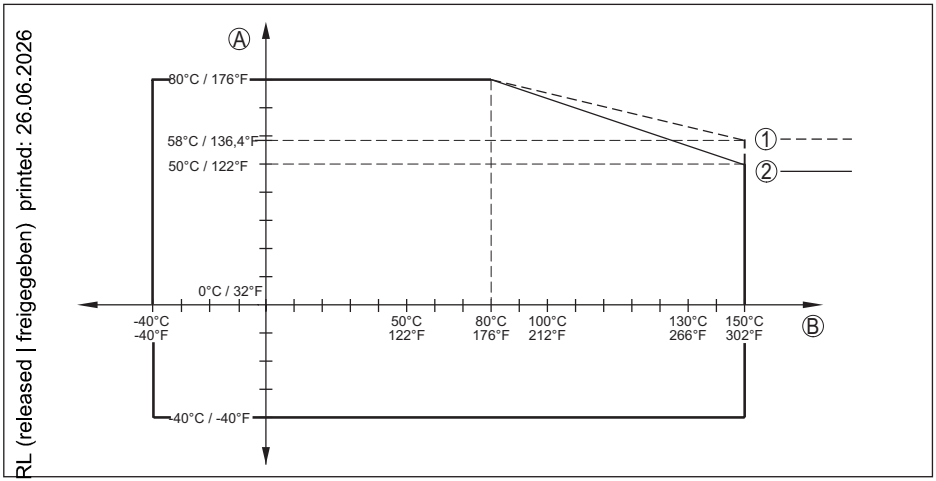

Fig. 71: Derating, ambient temperature, flange with lens antenna up to +150 °C (+302 °F)

A Ambient temperature
B Process temperature
1 Stainless steel housing - precision casting
2 Stainless steel housing - electropolished

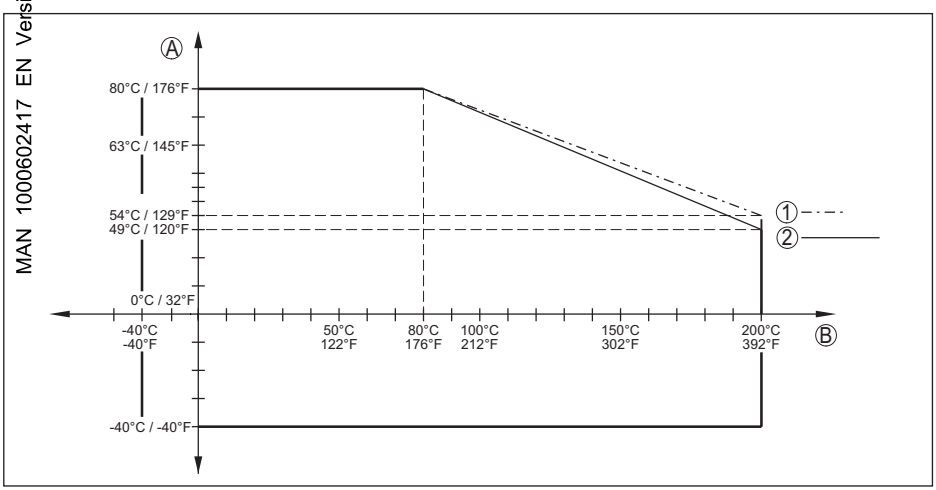

Fig. 72: Derating, ambient temperature, flange with lens antenna up to +200 °C (+392 °F)

A Ambient temperature
B Process temperature
1 Stainless steel housing - precision casting
2 Stainless steel housing - electropolished

MAN 1000602417 EN Version: C Status: RL (released | freigegeben) printed: 26.06.2026

1026255-EN-260316

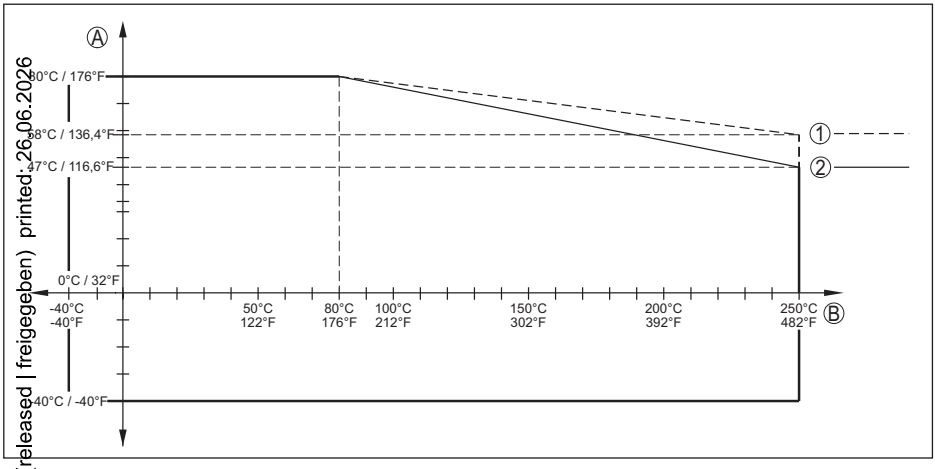

Fig. 73: Derating, ambient temperature, flange with lens antenna up to +250 °C (+482 °F)

A Ambient temperature
B Process temperature
1 Stainless steel housing - precision casting
2 Stainless steel housing - electropolished

Hygienic fitting

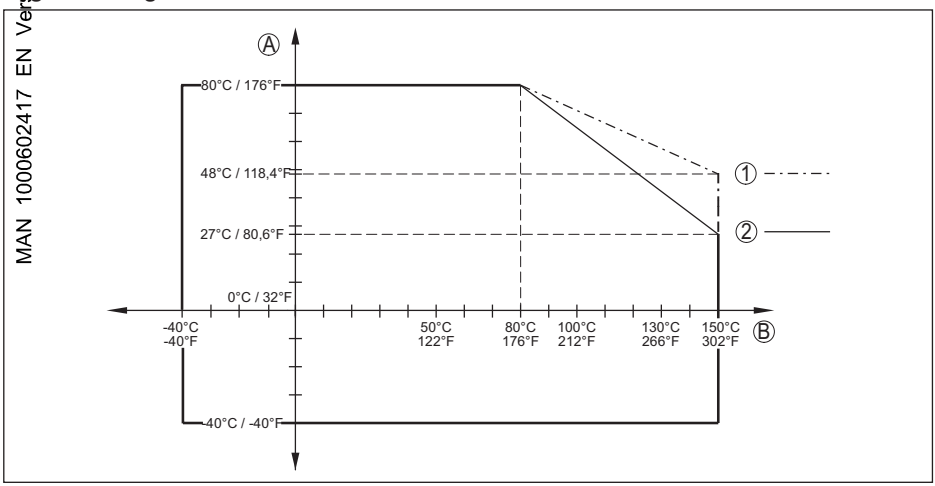

Fig. 74: Derating, ambient temperature, hygienic fitting up to +150 °C (+302 °F)

A Ambient temperature
B Process temperature
1 Stainless steel housing - precision casting
2 Stainless steel housing - electropolished

MAN 1000602417 EN Version: C Status: RL (released | freigegeben) printed: 26.06.2026

Flange with horn antenna

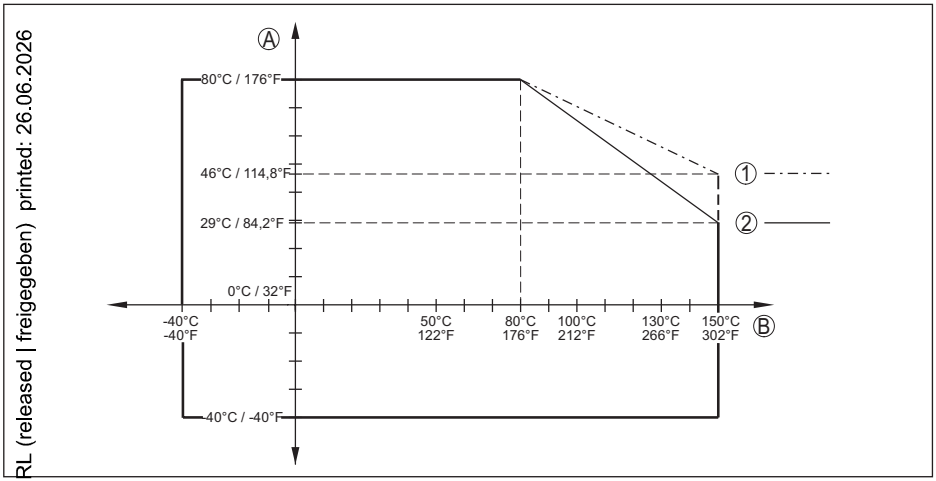

Fig. 75: Derating, ambient temperature, flange with horn antenna up to +150 °C (+302 °F)

A Ambient temperature
B Process temperature
1 Stainless steel housing - precision casting
2 Stainless steel housing - electropolished

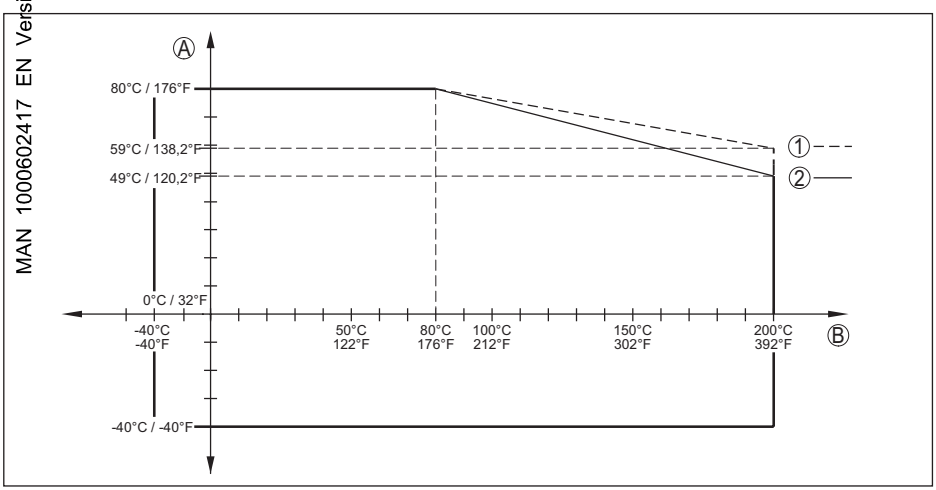

Fig. 76: Derating, ambient temperature, flange with horn antenna up to +200 °C (+392 °F)

A Ambient temperature
B Process temperature
1 Stainless steel housing - precision casting
2 Stainless steel housing - electropolished

MAN 1000602417 EN Version: C Status: RL (released | freigegeben) printed: 26.06.2026

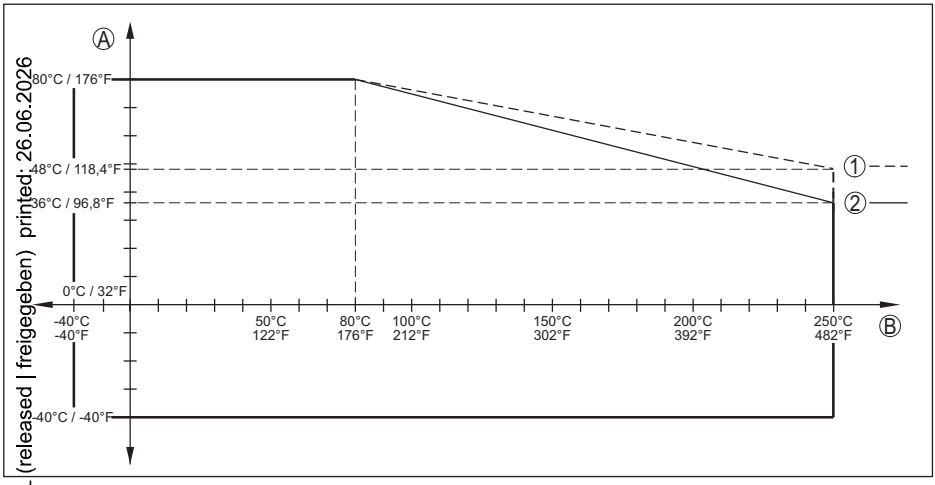

Fig. 77: Derating, ambient temperature, flange with horn antenna up to +250 °C (+482 °F)

A Ambient temperature
B Process temperature
1 Stainless steel housing - precision casting
2 Stainless steel housing - electropolished

Horn antenna - High temperature

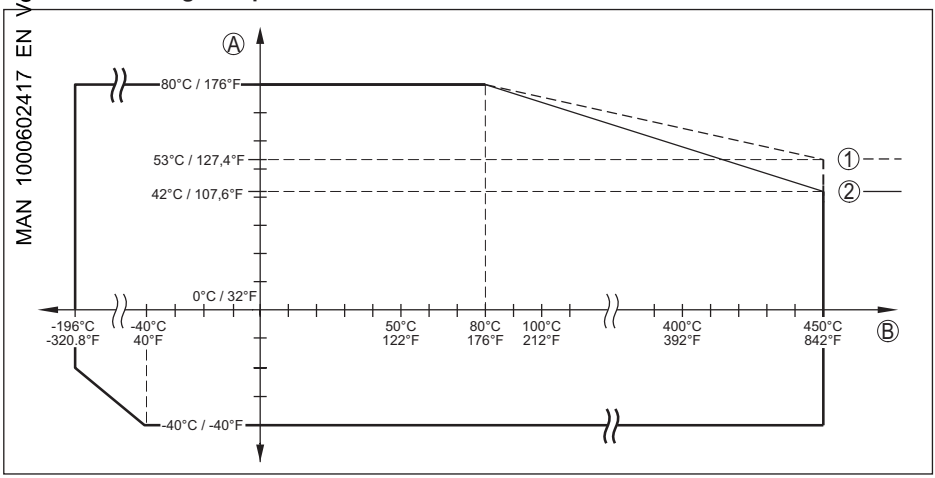

Fig. 78: Derating ambient temperature, horn antenna up to +450 °C (+842 °F)

A Ambient temperature
B Process temperature
1 Stainless steel housing - precision casting
2 Stainless steel housing - electropolished

MAN 1000602417 EN Version: C Status: RL (released | freigegeben) printed: 26.06.2026

Process conditions - Pressure

For the process conditions, please also note the specifications on the type label. The lowest value (amount) always applies.

Process fitting	Version	Process pressure
Plastic horn antenna	Compression flange	-1 … 2 bar (-100 … 200 kPa/-14.5 … 29.00 psig)
	Adapter flange	-1 … 1 bar (-100 … 100 kPa/-14.5 … 14.50 psig)
Thread with integrated antenna system	316L	-1 … 40 bar (-100 … 4000 kPa/-14.5 … 580.2 psig)
	PVDF	-1 … 3 bar (-100 … 300 kPa/-14.5 … 43.51 psig)
Flange with encapsulated antenna system *)	PN 6	-1 … 6 bar (-100 … 600 kPa/-14.5 … 87.02 psig)
	PN 16 (300 lb)	-1 … 16 bar (-100 … 1600 kPa/-14.5 … 232.1 psig)
	PN 40 (600 lb)	-1 … 25 bar (-100 … 2500 kPa/-14.5 … 362.6 psig)
	PN 64 (900 lb)	
	PN 40 (600 lb) Version -196 … +200 °C (-320.8 … +392 °F)	
	PN 64 (900 lb) Version -196 … +200 °C (-320.8 … +392 °F)	
Horn antenna	up to +150 °C (+302 °F)	-1 … 64 bar (-100 … 6400 kPa/-14.5 … 928.2 psig)
	up to +200 °C (+392 °F)	
	up to +250 °C (+482 °F)	
	up to +450 °C (+842 °F)	-1 … 160 bar (-100 … 16000 kPa/-14.5 … 2320 psig)
Flange with lens antenna		-1 … 3 bar (-100 … 300 kPa/-14.5 … 43.51 psig)

*) *The following flanges have continuous flange plating and can therefore only be used up to max. 3 bar (300 kPa/43.51 psig) process pressure:*
- *ASME B16.5 NPS 1½" Class 150 FF / 316/316L*
- *ASME B16.5 NPS 2" Class 150 FF / 316/316L*
- *ASME B16.5 NPS 4" Class 150 FF / 316/316L*

Vessel pressure for flange with encapsulated antenna system (depending on process fitting)

- flange up to 2" (from 300 lb)/DN 50 -1 … 25 bar (-100 … 2500 kPa/-14.5 … 362.6 psig)
- Flange from 3" (from 300 lb), DN 80 -0,5 … 25 bar (-50 … 2500 kPa/-7.25 … 362.6 psig)
- SMS -1 … 6 bar (-100 … 600 kPa/-14.5 … 87 psig)

Vessel pressure relating to the flange nominal pressure stage: see supplementary instructions manual "*Flanges according to DIN-EN-ASME-JIS-GOST*"

Hygienic adapter	Version	Process pressure
Clamp (DIN 32676, ISO 2852)	1", 1½"	-1 … 25 bar (-100 … 2500 kPa/-14.5 … 362.6 psig)
	2", 2½", 3"	-1 … 16 bar (-100 … 1600 kPa/-14.5 … 232.1 psig)
	3½",4"	-1 … 10 bar (-100 … 1000 kPa/-14.5 … 145.0 psig)

MAN 1000602417 EN Version: C Status: RL (released | freigegeben) printed: 26.09.2016

1026255-EN-260316

Hygienic adapter	Version	Process pressure
Collar socket (DIN 11851)	DN 32, DN 40, DN 50, DN 65, DN 80, DN 100/4"	-1 … 25 bar (-100 … 2500 kPa/-14.5 … 362.6 psig)
	DN 125	-1 … 16 bar (-100 … 1600 kPa/-14.5 … 232.1 psig)
Collar socket (DIN 11864-1)	DN 40, DN 50, DN 60, DN 65, DN 76.1, DN 80	-1 … 25 bar (-100 … 2500 kPa/-14.5 … 362.6 psig)
Threaded mounting socket (DIN 11864-1)	DN 50, DN 80	-1 … 25 bar (-100 … 2500 kPa/-14.5 … 362.6 psig)
Grooved flange (DIN 11864-2)	DN 50, DN 60.3 DN 76.1, DN 80, DN 88.9	-1 … 16 bar (-100 … 1600 kPa/-14.5 … 232.1 psig)
Saddle flange (DIN 11864-2)	DN 40	-1 … 25 bar (-100 … 2500 kPa/-14.5 … 362.6 psig)
	DN 50, DN 60.3, DN65, DN 76.1, DN 80, DN 88.9, DN 100	-1 … 16 bar (-100 … 1600 kPa/-14.5 … 232.1 psig)
Clamp liner (DIN 11864-3)	DN 32, DN 40, DN 50, DN 60,3, DN 65	-1 … 25 bar (-100 … 2500 kPa/-14.5 … 362.6 psig)
	DN 76.1, DN 80, DN 88.9, DN 100	-1 … 16 bar (-100 … 1600 kPa/-14.5 … 232.1 psig)
Grooved connection piece (DIN 11864-3)	DN 50	-1 … 25 bar (-100 … 2500 kPa/-14.5 … 362.6 psig)
	DN 80	-1 … 16 bar (-100 … 1600 kPa/-14.5 … 232.1 psig)
Varinline PN 25	Form F	-1 … 25 bar (-100 … 2500 kPa/-14.5 … 362.6 psig)
	Form N	-1 … 20 bar (-100 … 2000 kPa/-14.5 … 290.0 psig)
DRD connection	ø 65 mm	-1 … 16 bar (-100 … 1600 kPa/-14.5 … 232.1 psig)
SMS 1145	DN 38, DN 51, DN 76, DN 101.6, DN 63.5	-1 … 6 bar (-100 … 600 kPa/-14.5 … 87.0 psig)
NEUMO BioControl	DN 50 PN 16	-1 … 16 bar (-100 … 1600 kPa/-14.5 … 232.1 psig)

Mechanical environmental conditions

Vibration resistance (Tested according to IEC 60068-2-6, 5 … 200 Hz)

Antenna version	Vibration resistance
Plastic horn antenna	1 g
Thread with integrated antenna system	2 g
Flange with encapsulated antenna system	
Flange with lens antenna	
Thread for hygienic adapter G1, G1½	5 g
Hygienic fitting	5 g[33)]

[33)] For hygienic fittings with clamp connection, use suitable, stable tension clamps to ensure the vibration resistance.

MAN 1000602412 EN Version: C Status: RL (released | freigegeben) printed: 26.06.2026

1026255-EN-260316

Shock resistance (Tested according to IEC 60068-2-27)

Antenna version	Shock resistance
Plastic horn antenna	5 g/11 ms, 10 g/11 ms
Thread with integrated antenna system Flange with encapsulated antenna system Thread for hygienic adapter Hygienic fitting Horn antenna Flange with lens antenna	10 g/11 ms, 30 g/6 ms, 50 g/2.3 ms[34]

Data on rinsing air connection

Recommended max. pressure with continuous rinsing	1 bar (14.50 psig)
Max. permissible pressure	6 bar (87.02 psig)
Air quality	Filtered

Air volume, depending on pressure

Plastic horn antenna	Air volume	
Pressure	Without reflux valve	With reflux valve
0.2 bar (2.9 psig)	3.3 m³/h	-
0.4 bar (5.8 psig)	5 m³/h	-
0.6 bar (8.7 psig)	6 m³/h	1 m³/h
0.8 bar (11.6 psig)	-	2.1 m³/h
1 bar (14.5 psig)	-	3 m³/h
1.2 bar (17.4 psig)	-	3.5 m³/h
1.4 bar (20.3 psig)	-	4.2 m³/h
1.6 bar (23.2 psig)	-	4.4 m³/h
1.8 bar (26.1 psig)	-	4.8 m³/h
2 bar (29.0 psig)	-	5.1 m³/h

Horn antenna	Air volume	
Pressure	Without reflux valve	With reflux valve
0.5 bar (7.3 psig)	3.3 m³/h	1.2 m³/h
0.6 bar (8.7 psig)	3.5 m³/h	1.4 m³/h
0.7 bar (10.2 psig)	3.7 m³/h	1.7 m³/h
0.8 bar (11.6 psig)	3.9 m³/h	1.8 m³/h
0.9 bar (13.1 psig)	4.0 m³/h	2.1 m³/h
1 bar (14.5 psig)	4.2 m³/h	2.2 m³/h

[34] For hygienic fittings with clamp connection, use suitable, stable tension clamps to ensure the vibration resistance.

MAN 1000024217 EN Version: C Status: RL (released | freigegeben) printed: 06.2026

Horn antenna	Air volume	
Pressure	Without reflux valve	With reflux valve
1.5 bar (21.8 psig)	5.0 m³/h	3.2 m³/h
2 bar (29.0 psig)	5.5 m³/h	4.5 m³/h

Flange with lens antenna	Air volume	
Pressure	Without reflux valve	With reflux valve
0.2 bar (2.9 psig)	1.7 m³/h	-
0.4 bar (5.8 psig)	2.5 m³/h	-
0.6 bar (8.7 psig)	2.9 m³/h	0.8 m³/h
0.8 bar (11.6 psig)	3.3 m³/h	1.5 m³/h
1 bar (14.5 psig)	3.6 m³/h	2 m³/h
1.2 bar (17.4 psig)	3.9 m³/h	2.3 m³/h
1.4 bar (20.3 psig)	4 m³/h	2.7 m³/h
1.6 bar (23.2 psig)	4.3 m³/h	3 m³/h
1.8 bar (26.1 psig)	4.5 m³/h	3.5 m³/h
2 bar (29.0 psig)	4.6 m³/h	4 m³/h

Notes for all antennas with purging air connection:

Pressure above 2 bar can cause abrasion on the antenna. Pressure greater than 2 bar only slightly increases the amount of air flowing through the system.

Connection

- Thread — G⅛
- Seal at flange with lens antenna — Threaded plug of 316Ti

Reflux valve (optional)

- Material — 316L
- Thread — G⅛
- Seal — FKM (SHS FPM 70C3 GLT), EPDM (COG AP310)
- For connection — G⅛
- Opening pressure — 0.5 bar (7.25 psig)
- Nominal pressure stage — PN 250

Electromechanical data - version IP66/IP67 and IP66/IP68 (0.2 bar)

Options of the cable entry

- Cable entry — M20 x 1.5; ½ NPT
- Cable gland — M20 x 1.5; ½ NPT (cable ø see below table)
- Blind plug — M20 x 1.5; ½ NPT
- Closing cap — ½ NPT

MAN 1000024179 EN Version: C Status: RL (released | freigegeben) Printed: 26.06.2026

1026255-EN-260316

Material cable gland	Cable diameter				
	4.5 … 8.5 mm	5 … 9 mm	6 … 12 mm	7 … 12 mm	10 … 14 mm
PA	-	√	√	-	√
Brass, nickel-plated	√	√	√	-	-
Stainless steel	-	√	√	-	√

Wire cross-section (spring-loaded terminals)

- Massive wire, stranded wire: 0.2 … 2.5 mm² (AWG 24 … 14)
- Stranded wire with end sleeve: 0.2 … 1.5 mm² (AWG 24 … 16)

Electromechanical data - version IP66/IP68 (1 bar)

Options of the cable entry

- Cable gland with integrated connection cable: M20 x 1.5 (cable ø 5 … 9 mm)
- Cable entry: ½ NPT
- Blind plug: M20 x 1.5; ½ NPT

Connection cable

- Wire cross-section: 0.5 mm² (AWG 20)
- Wire resistance: < 0.036 Ω/m
- Tensile strength: < 1200 N (270 lbf)
- Standard length: 5 m (16.4 ft)
- Max. length: 180 m (590.6 ft)
- Min. bending radius (at 25 °C/77 °F): 25 mm (0.984 in)
- Diameter: approx. 8 mm (0.315 in)
- Colour - Non-Ex version: Black
- Colour - Ex-version: Blue

Interface to the external display and adjustment unit

Data transmission	Digital (I²C-Bus)
Connection cable	Four-wire

Sensor version	Configuration, connection cable	
	Max. cable length	Shielded
4 … 20 mA/HART	50 m	●

Integrated clock

Date format	Day.Month.Year
Time format	12 h/24 h
Time zone, factory setting	CET
Max. rate deviation	10.5 min/year

MAN 1000062417 EN Version: C Status: RL (released | freigegeben) printed: 26.06.2026

1026255-EN-260316

MAN 1000024157 EN Version: C Status: RL (released | freigegeben) printed: 26.06.2006

Additional output parameter - Electronics temperature	
Range	-40 … +85 °C (-40 … +185 °F)
Resolution	< 0.1 K
Deviation	± 3 K
Availability of the temperature values	
– Indication	Via the display and adjustment module
– Output	Via the respective output signal

Voltage supply, sensor	
Operating voltage U_B	12 … 35 V DC
Operating voltage U_B with lighting switched on	18 … 35 V DC
Reverse voltage protection	Integrated
Permissible residual ripple	
– for 12 V < U_B < 18 V	≤ 0.7 V_{eff} (16 … 400 Hz)
– for 18 V < U_B < 35 V	≤ 1 V_{eff} (16 … 400 Hz)
Load resistor	
– Calculation	(U_B - U_{min})/0.022 A
– Example - U_B= 24 V DC	(24 V - 12 V)/0.022 A = 545 Ω

Potential connections and electrical separating measures in the instrument	
Electronics	Non-floating
Reference voltage[35]	500 V_{eff}
Conductive connection	Between ground terminal and metallic process fitting

Electrical protective measures

Housing material	Version	Protection acc. to IEC 60529	Protection acc. to NEMA
Stainless steel (electro-polished)	Single chamber	IP66/IP68 (0.2 bar)/IP69	Type 6P
Stainless steel (precision casting)	Single chamber	IP66/IP68 (0.2 bar)	Type 6P

Connection of the feeding power supply unit	Networks of overvoltage category III
Altitude above sea level	
– by default	up to 2000 m (6562 ft)
– with connected overvoltage protection	up to 5000 m (16404 ft)
Pollution degree[36]	4
Protection rating (IEC 61010-1)	III

[35] Galvanic separation between electronics and metal housing parts
[36] When used with fulfilled protection.

17.2 Radio astronomy stations

Certain restrictions on the use of LEVEL TRANSMITTER 8140 outside closed vessels result from the radio license. You can find these restrictions in the accompanying document "*Information sheet Radio licenses*". Some of these restrictions have to do radio astronomy stations. The following table states the geographic positions of radio astronomy stations in Europe:

Country	Name of the Station	Geographic Latitude	Geographic Longitude
Finland	Metsähovi	60°13'04" N	24°23'37" E
France	Plateau de Bure	44°38'01" N	05°54'26" E
Germany	Effelsberg	50°31'32" N	06°53'00" E
Italy	Sardinia	39°29'50" N	09°14'40" E
Spain	Yebes	40°31'27" N	03°05'22" W
	Pico Veleta	37°03'58" N	03°23'34" W
Sweden	Onsala	57°23'45" N	11°55'35" E

17.3 Dimensions

The following dimensional drawings are only an extract of the possible versions.

Housing

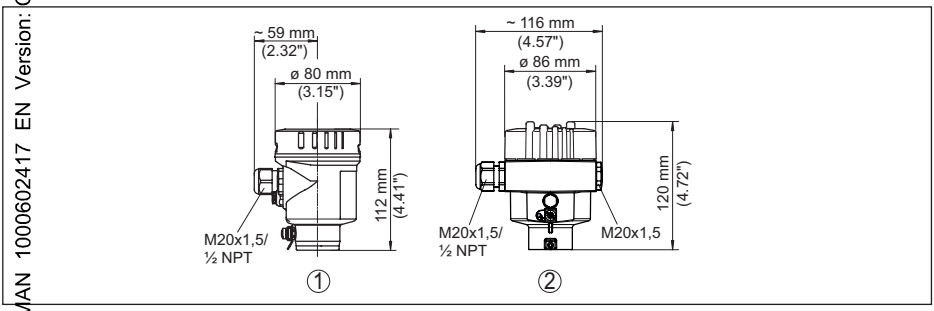

Fig. 79: Housing dimensions, with integrated display and adjustment module the housing is 18 mm/0.71 in higher

1 Stainless steel - electropolished
2 Stainless steel - precision casting

MAN 1000602417 EN Version: C Status: RL (released | freigegeben) printed: 26.06.2006

Plastic horn antenna with compression flange

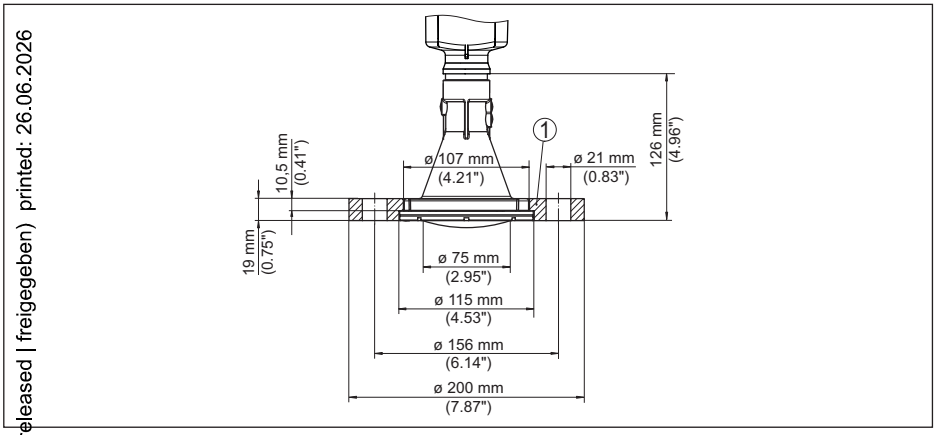

Fig. 80: LEVEL TRANSMITTER 8140 with compression flange suitable for 3" 150 lbs, DN 80 PN 16

1 Compression flange

Plastic horn antenna with compression flange and purging air connection

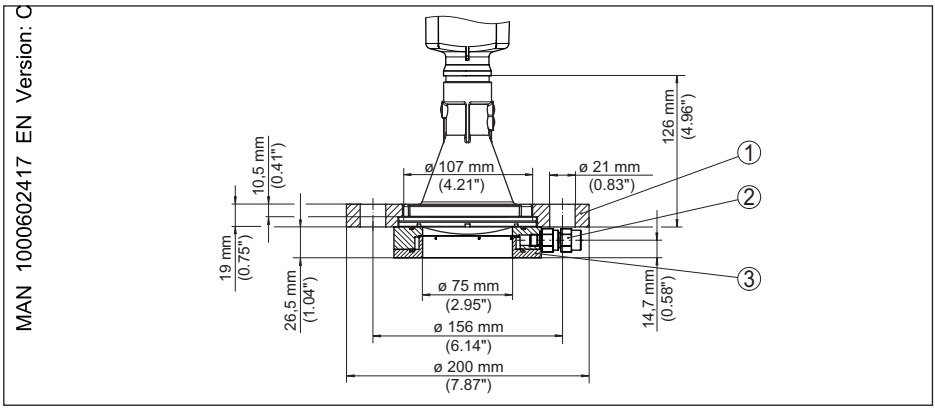

Fig. 81: LEVEL TRANSMITTER 8140, compression flange and purging air connection suitable for 3" 150 lbs, DN 80 PN 16

1 Compression flange
2 Reflux valve
3 Rinsing air connection

MAN 1000602417 EN Version: C Status: RL (released | freigegeben) printed: 26.06.2026

Plastic horn antenna with adapter flange

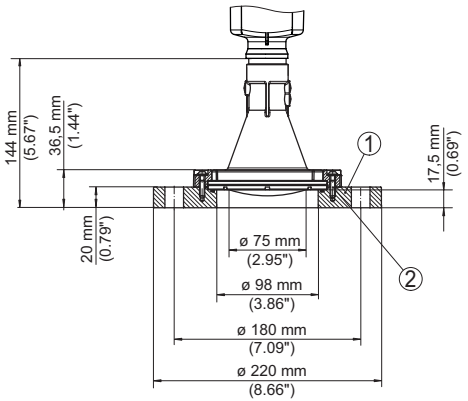

Fig. 82: LEVEL TRANSMITTER 8140, adapter flange DN 100 PN 6

1 Adapter flange
2 Process seal

Plastic horn antenna mit adapter flange und purging air connection

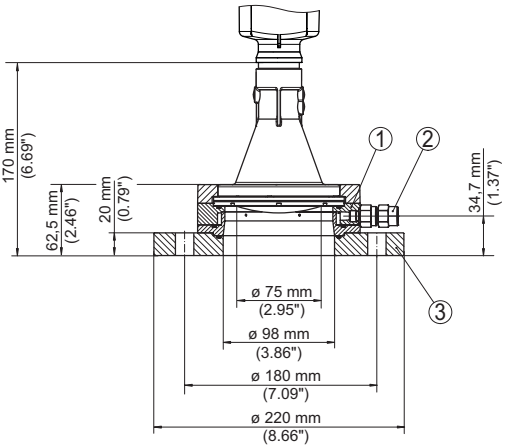

Fig. 83: LEVEL TRANSMITTER 8140, adapter flange and purging air connection DN 100 PN 6

1 Rinsing air connection
2 Reflux valve
3 Adapter flange

MAN 1000602417 EN Version: C Status: RL (released | freigegeben) printed: 26.06.2026

Plastic horn antenna with mounting strap

MAN 1000602417 EN Version: C Status: RL (released | freigegeben) printed: 26.06.2026

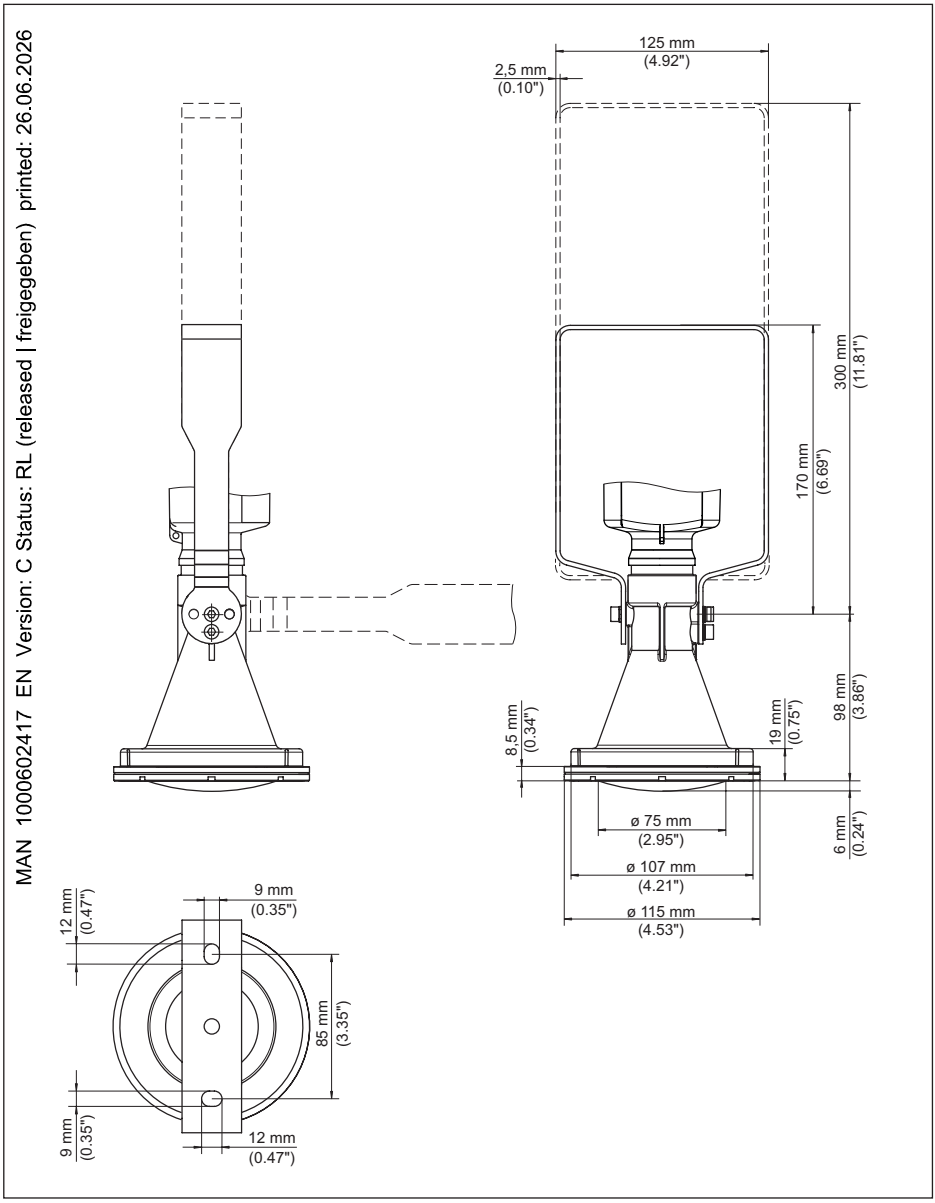

Fig. 84: LEVEL TRANSMITTER 8140, plastic horn antenna, mounting strap in 170 or 300 mm length

Thread with integrated antenna system of PVDF up to +80 °C (+176 °F)

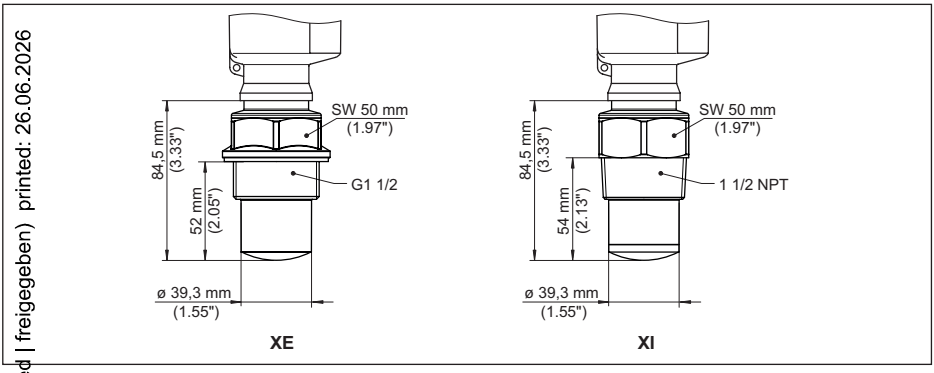

Fig. 85: LEVEL TRANSMITTER 8140, thread with integrated antenna system of PVDF up to +80 °C (+176 °F)
XE: G1½ (DIN 3852-A), PVDF
XI: 1½ NPT (ASME B1.20.1), PVDF

MAN 1000602417 EN Version: C Status: RL (released | freigegeben) printed: 26.06.2026

1026255-EN-260316

Thread with integrated antenna system up to +150 °C (+302 °F)

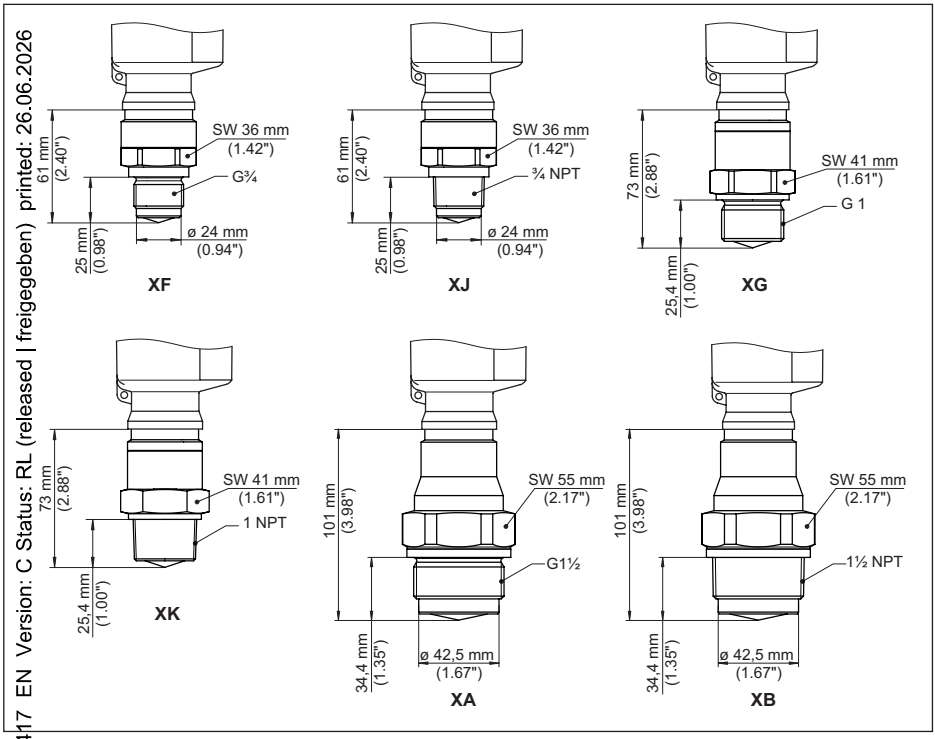

Fig. 86: LEVEL TRANSMITTER 8140, thread with integrated antenna system up to +150 °C (+302 °F)

XF G¾ (DIN 3852-A)
XJ ¾ NPT (ASME B1.20.1)
XG G1 (DIN 3852-A)
XK 1 NPT (ASME B1.20.1)
XA G1½ (DIN 3852-A)
XB 1½ NPT (ASME B1.20.1)

MAN 1000062417 EN Version: C Status: RL (released | freigegeben) printed: 26.06.2026

Thread with integrated antenna system up to +200 °C (+392 °F)/+250 °C (+482 °F)

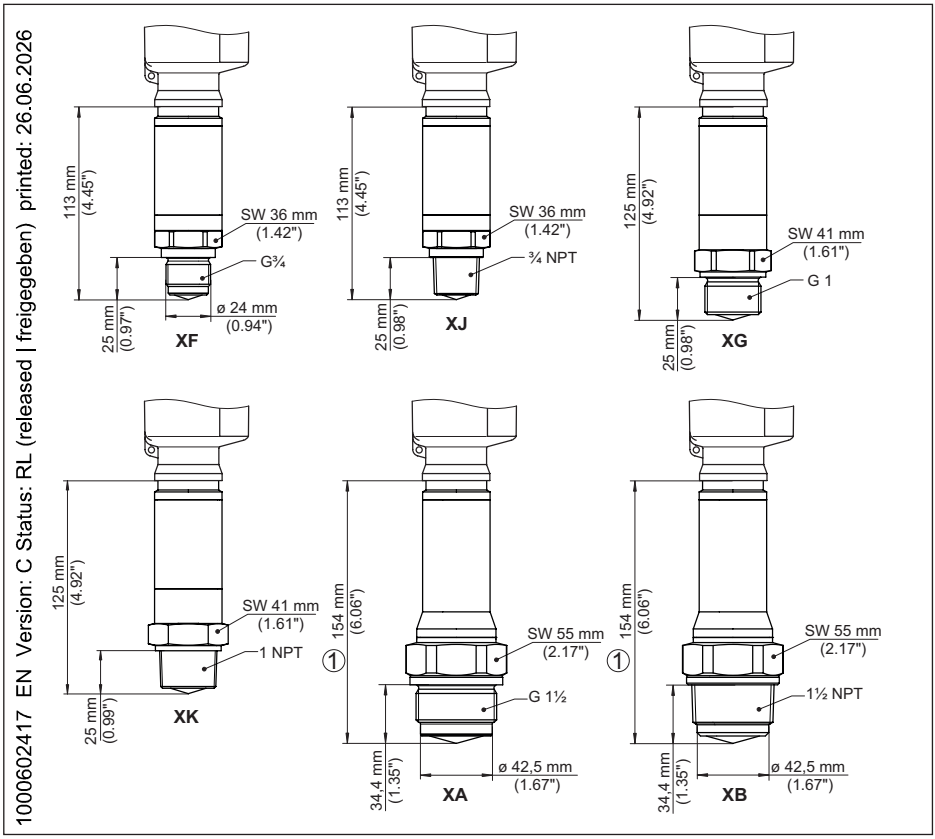

FIG. 87: LEVEL TRANSMITTER 8140, thread with integrated antenna system up to +200 °C (+392 °F)/+250 °C (+482 °F)

1 With version up to +250 °C (+482 °F): 125 mm (4.92")
XF G¾ (DIN 3852-A)
XJ ¾ NPT (ASME B1.20.1)
XG G1 (DIN 3852-A)
XK 1 NPT (ASME B1.20.1)
XA G1½ (DIN 3852-A)
XB 1½ NPT (ASME B1.20.1)

Flange with horn antenna up to +150 °C (+302 °F)/+200 °C (+392 °F)/+250 °C (+482 °F)

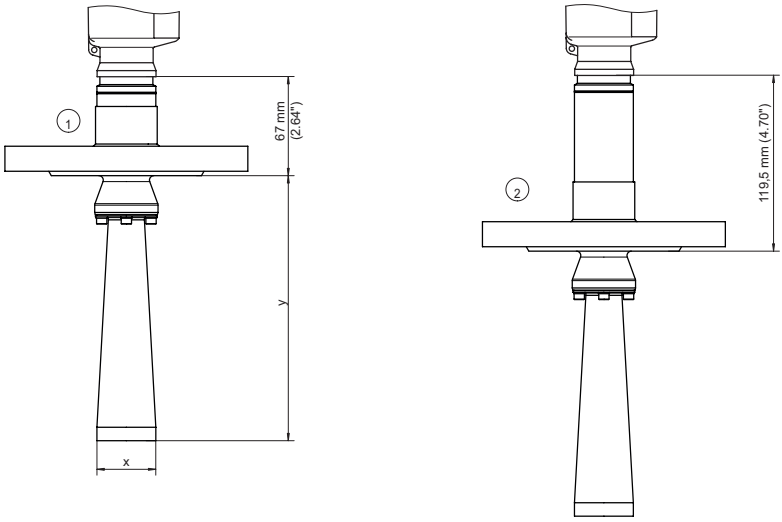

mm	y	x
¾"	25	ø21
1"	40	ø26
1½"	180	ø40
2"	213	ø48
3"	335	ø75

inch	y	x
¾"	0.98"	ø0.83"
1"	1.57"	ø1.02"
1½"	7.09"	ø1.58"
2"	8.39"	ø1.89"
3"	13.19"	ø2.95"

Fig. 88: LEVEL TRANSMITTER 8140, flange with horn antenna up to +150 °C (+302 °F)/+250 °C (+482 °F)

1 *Version up to +150 °C (+302 °F)*
2 *Version up to +200 °C (+392 °F) and version up to +250 °C (+482 °F)*

MAN 1000602417 EN Version: C Status: RL (released | freigegeben) printed: 26.06.2026

1026255-EN-260316

Thread with horn antenna +450 °C version

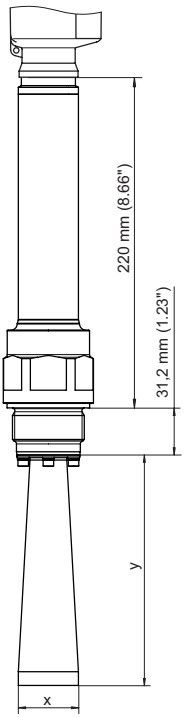

mm	y	x
1½"	155	ø40
2"	188	ø48
3"	310	ø75

inch	y	x
1½"	6.04"	ø1.58"
2"	7.40"	ø1.89"
3"	12.20"	ø2.95"

Fig. 89: LEVEL TRANSMITTER 8140, thread with horn antenna +450 °C version

MAN 1000602417 EN Version: C Status: RL (released | freigegeben) printed: 26.06.2026

1026255-EN-260316

Flange with horn antenna +450 °C version

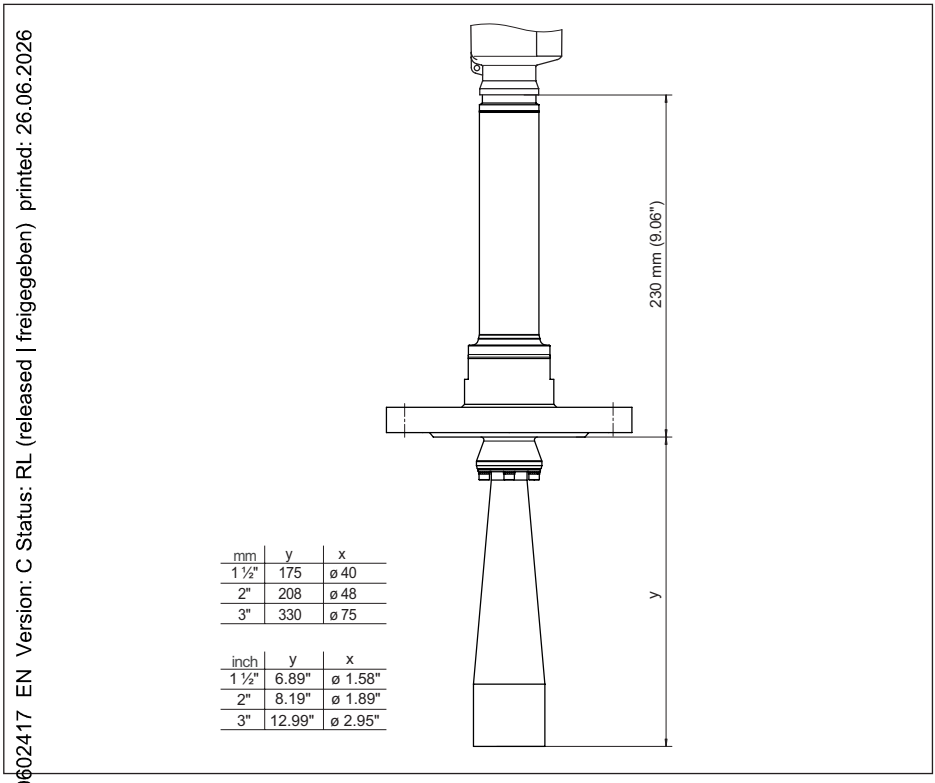

mm	y	x
1 ½"	175	ø 40
2"	208	ø 48
3"	330	ø 75

inch	y	x
1 ½"	6.89"	ø 1.58"
2"	8.19"	ø 1.89"
3"	12.99"	ø 2.95"

Fig. 90: LEVEL TRANSMITTER 8140, flange with horn antenna +450 °C version

Flange with encapsulated antenna system DN 25

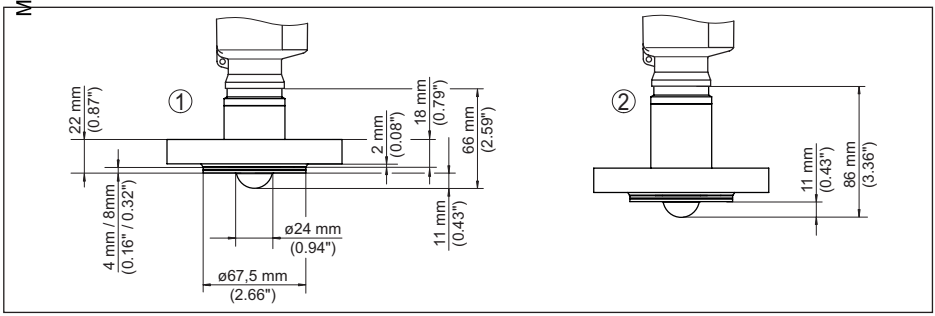

Fig. 91: LEVEL TRANSMITTER 8140, encapsulated antenna system DN 25 PN 40

1 Version up to +150 °C (+302 °F)
2 Version up to +200 °C (+392 °F)

MAN 1000602417 EN Version: C Status: RL (released | freigegeben) printed: 26.06.2026

Flange with encapsulated antenna system DN 80

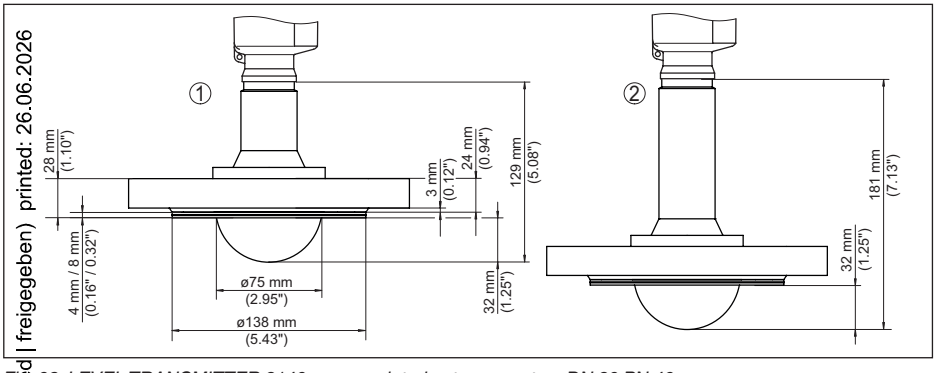

Fig. 92: LEVEL TRANSMITTER 8140, encapsulated antenna system DN 80 PN 40

1 Version up to +150 °C (+302 °F)
2 Version up to +200 °C (+392 °F)

Thread for hygienic adapter

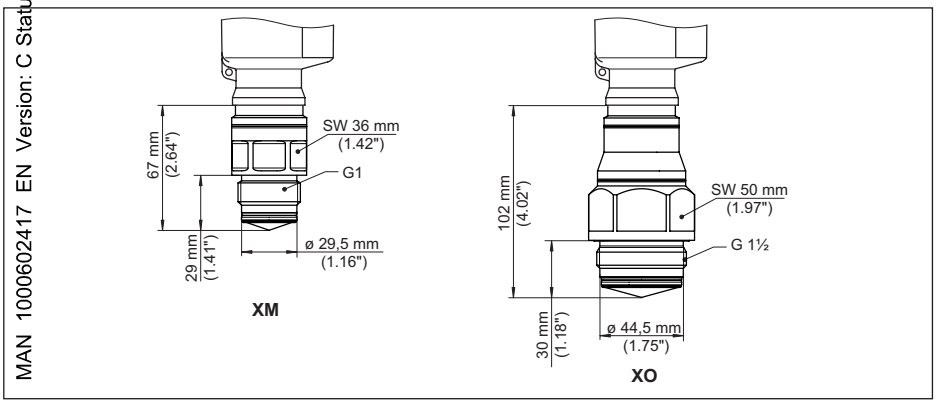

Fig. 93: LEVEL TRANSMITTER 8140, thread for hygienic adapter

XM G1 (ISO 228-1) for hygienic adapter sealing with O-ring
XO G1½ (ISO 228-1) for hygienic adapter sealing with O-ring

MAN 1000602417 EN Version: C Status: RL (released | freigegeben) printed: 26.06.2026

1026255-EN-260316

Hygienic fitting 1

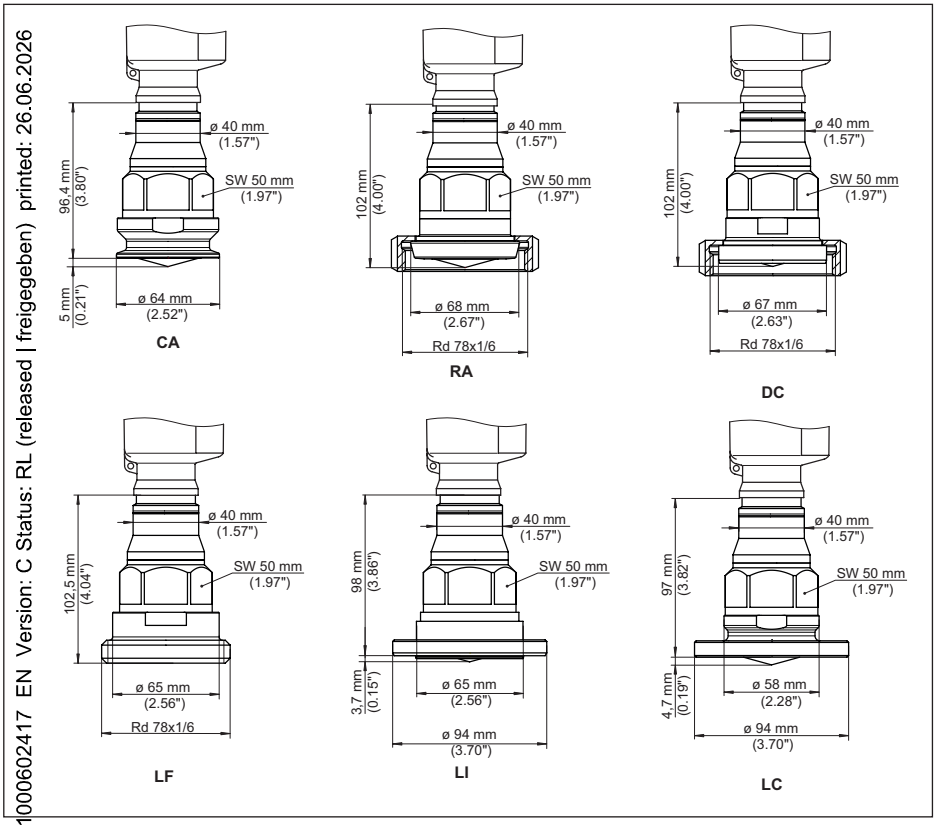

1000602417 EN Version: C Status: RL (released | freigegeben) printed: 26.06.2026

Fig. 94: LEVEL TRANSMITTER 8140, hygienic fitting

CA Clamp 2" (DIN 32676, ISO 2852)
RA Slotted nut DN 50 (DIN 11851)
DC Collar socket DN 50 Form A for tube 53 x 1.5 (DIN 11864-1)
LF Threaded socket DN 50 Form A for tube 53 x 1.5 (DIN 11864-1)
LI Grooved flange DN 50 Form A for tube 53 x 1.5 (DIN 11864-2)
LC Collar flange DN 50 Form A for tube 53 x 1.5 (DIN 11864-1)

Hygienic fitting 2

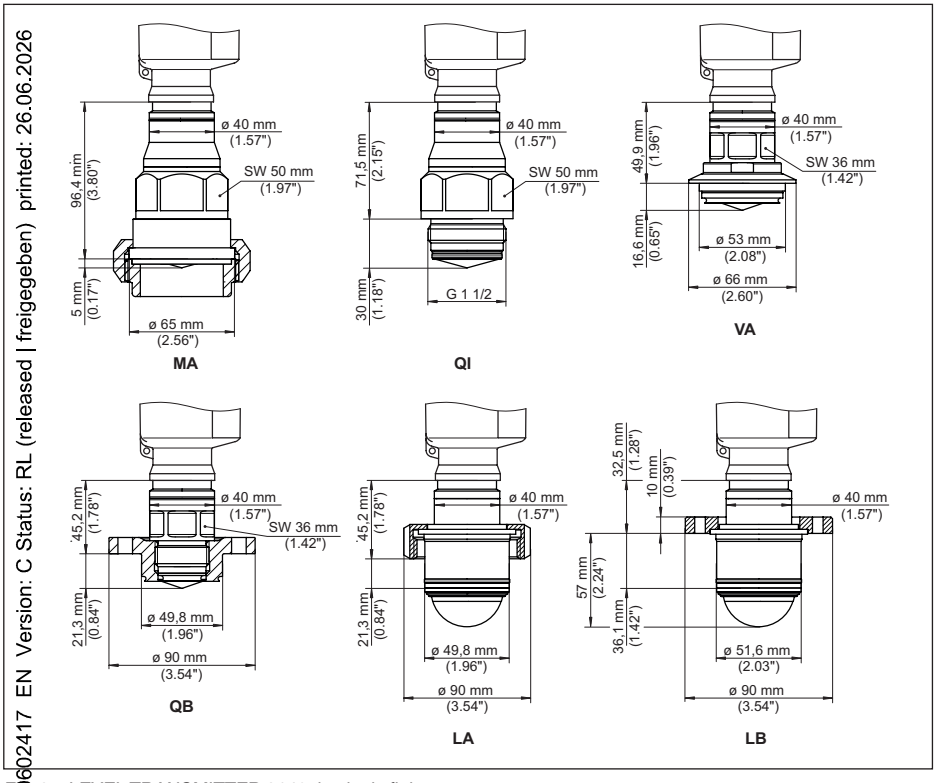

FIG 95: LEVEL TRANSMITTER 8140, hygienic fitting

MA SMS 1145 DN 51
QI DRD connection ø 65 mm
VA For Varinline Form F (1") D = 50 mm
QB For Neumo Biocontrol D50
LA Hygienic connection with compression nut F40
LB Hygienic fitting with tension flange DN 32

MAN 1000002417 EN Version: C Status: RL (released | freigegeben) printed: 26.06.2026

1026255-EN-260316

Flange with lens antenna

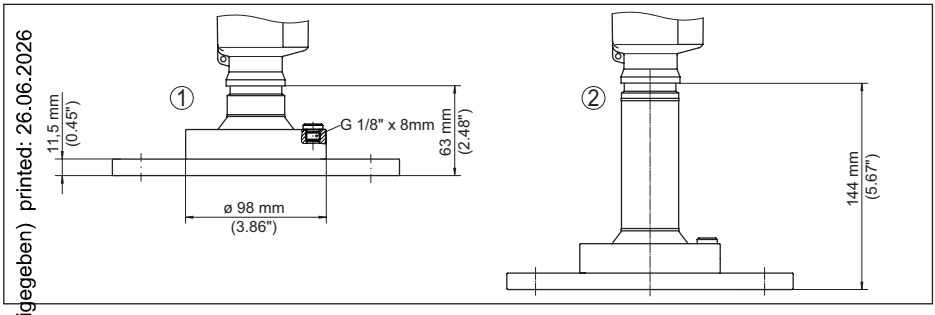

Fig. 96: LEVEL TRANSMITTER 8140, flange with lens antenna (flange thickness acc. to drawing, flange dimensions acc. to DIN, ASME, JIS)

1 Version up to +150 °C (+302 °F)
2 Version up to +250 °C (+482 °F)

Flange with lens antenna and purging air connection

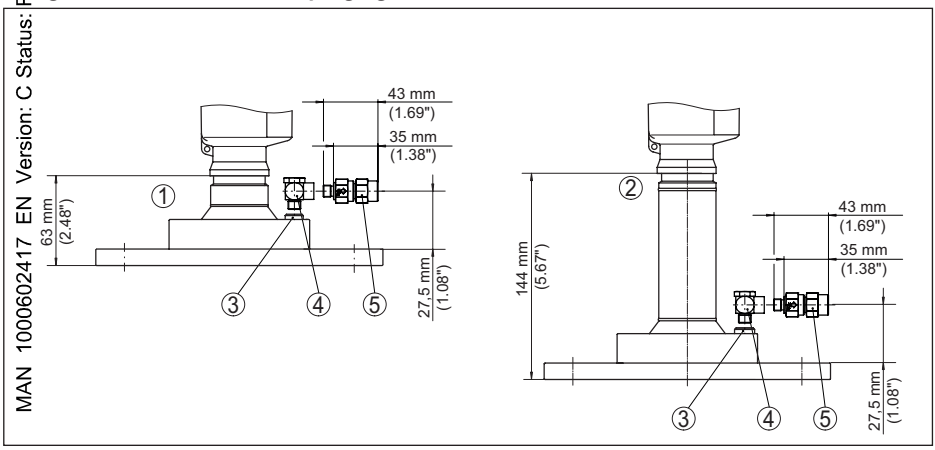

Fig. 97: LEVEL TRANSMITTER 8140, flange with lens antenna and purging air connection

1 Version up to +150 °C (+302 °F)
2 Version up to +250 °C (+482 °F)
3 Blind plug
4 90° angle joint
5 Reflux valve

MAN 1000602417 EN Version: C Status: RL (released | freigegeben) printed: 26.06.2026

Flange with lens antenna and swivelling holder

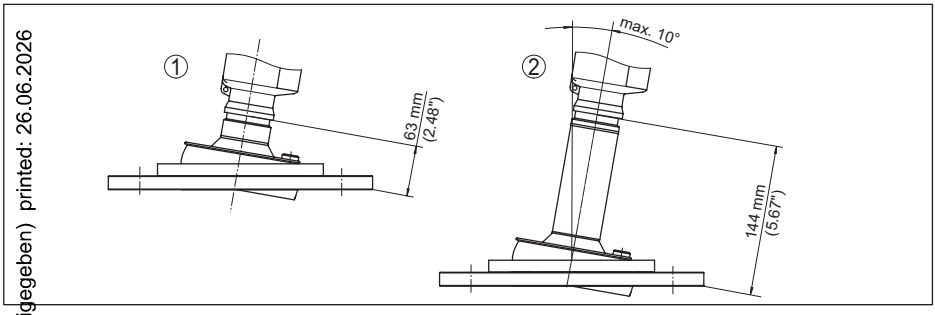

Fig. 98: LEVEL TRANSMITTER 8140, flange with lens antenna and swivelling holder

1 Version up to +150 °C (+302 °F)
2 Version up to +250 °C (+482 °F)

Flange with lens antenna, swivelling holder and purging air connection

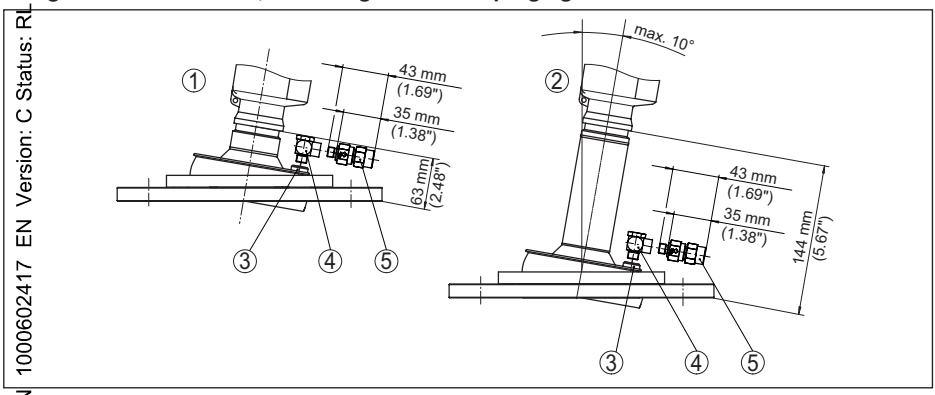

Fig. 99: LEVEL TRANSMITTER 8140, flange with lens antenna, swivelling holder and purging air connection

1 Version up to +150 °C (+302 °F)
2 Version up to +250 °C (+482 °F)
3 Blind plug
4 90° angle joint
5 Reflux valve

MAN 1000602417 EN Version: C Status: RL (released | freigegeben) printed: 26.06.2026

17.4 Licensing information for open source software

Open source software components are also used in this device. A documentation of these components with the respective license type, the associated license texts, copyright notes and disclaimers can be found on our homepage.

17.5 Trademark

All the brands as well as trade and company names used are property of their lawful proprietor/originator.

MAN 1000602417 EN Version: C Status: RL (released | freigegeben) printed: 26.06.2026

1026255-EN-260316

MAN 1000602417 EN Version: C Status: RL (released | freigegeben) printed: 26.06.2026

1026255-EN-260316

MAN 1000602417 EN Version: C Status: RL (released | freigegeben) printed: 26.06.2026

1026255-EN-260316

MAN 1000602417 EN Version: C Status: RL (released | freigegeben) printed: 26.06.2026

1026255-EN-260316

MAN 1000602417 EN Version: C Status: RL (released | freigegeben) printed: 26.06.2026

The smart choice
of Fluid Control Systems
www.burkert.com

bürkert
FLUID CONTROL SYSTEMS

1026255-EN-260316