MAN 1000657629 EN Version: B Status: RL (released | freigegeben) printed: 26.06.2026

Operating Instructions

LEVEL TRANSMITTER
8131 – 20 m

Two-wire: 4 … 20 mA/HART

bürkert
FLUID CONTROL SYSTEMS

Contents

1 About this document ... 4
1.1 Function ... 4
1.2 Target group ... 4
1.3 Symbols used ... 4

2 For your safety ... 5
2.1 Authorised personnel ... 5
2.2 Intended use ... 5
2.3 Warning about incorrect use ... 5
2.4 General safety instructions ... 5
2.5 Mode of operation - Radar signal ... 6
2.6 Installation and operation in the USA and Canada ... 6

3 Product description ... 7
3.1 Configuration ... 7
3.2 Principle of operation ... 8
3.3 Adjustment ... 8
3.4 Packaging, transport and storage ... 8

4 Mounting ... 10
4.1 General instructions ... 10
4.2 Mounting instructions ... 11
4.3 Measurement setup - Flow ... 17

5 Connecting to power supply ... 20
5.1 Preparing the connection ... 20
5.2 Connecting ... 21
5.3 Wiring plan ... 23
5.4 Switch-on phase ... 23

6 Access protection ... 24
6.1 Bluetooth radio interface ... 24
6.2 Protection of the parameterization ... 24

7 Setup with smartphone/tablet (Bluetooth) ... 26
7.1 Preparations ... 26
7.2 Connecting ... 26
7.3 Parameter adjustment ... 27

8 Adjustment menu ... 28
8.1 Menu overview ... 28
8.2 Description of the applications ... 30

9 Diagnostics and servicing ... 34
9.1 Maintenance ... 34
9.2 Rectify faults ... 34
9.3 Diagnosis, fault messages ... 34
9.4 Status messages according to NE 107 ... 35
9.5 Treatment of measurement errors ... 38
9.6 How to proceed if a repair is necessary ... 42

10 Dismount ... 43
10.1 Dismounting steps ... 43
10.2 Disposal ... 43

MAN 1000657629 EN Version: B Status: RL (released | freigegeben) printed: 26.06.2026

11 Certificates and approvals 44
11.1 Radio licenses 44
11.2 Approvals for Ex areas 44
11.3 Approvals as overfill protection 44
11.4 Metrological approvals 44
11.5 Food and pharmaceutical certificates 44
11.6 Conformity 44
11.7 NAMUR recommendations 45
12 Supplement 46
12.1 Technical data 46
12.2 Dimensions 52
12.3 Licensing information for open source software 53
12.4 Trademark 53

MAN 1000657629 EN Version: B Status: RL (released | freigegeben) printed: 26.06.2026

Editing status: 2025-06-30

MAN 1000657629 EN Version: B Status: RL (released | freigegeben) printed: 26.06.2026

1 About this document

1.1 Function

This instruction provides all the information you need for mounting, connection and setup as well as important instructions for maintenance, fault rectification, safety and the exchange of parts. Please read this information before putting the instrument into operation and keep this manual accessible in the immediate vicinity of the device.

1.2 Target group

This instruction manual is directed to trained personnel. The contents of this manual must be made available to the qualified personnel and implemented.

1.3 Symbols used

Information, note, tip: This symbol indicates helpful additional information and tips for successful work.

Note: This symbol indicates notes to prevent failures, malfunctions, damage to devices or plants.

Caution: Non-observance of the information marked with this symbol may result in personal injury.

Warning: Non-observance of the information marked with this symbol may result in serious or fatal personal injury.

Danger: Non-observance of the information marked with this symbol results in serious or fatal personal injury.

Ex applications
This symbol indicates special instructions for Ex applications.

- **List**
  The dot set in front indicates a list with no implied sequence.

1 **Sequence of actions**
Numbers set in front indicate successive steps in a procedure.

Disposal
This symbol indicates special instructions for disposal.

1052384-EN-250701

MAN 1000657629 EN Version: B Status: RL (released | freigegeben) printed: 26.06.2026

2 For your safety

2.1 Authorised personnel

All operations described in this documentation must be carried out only by trained and authorized personnel.

During work on and with the device, the required personal protective equipment must always be worn.

2.2 Intended use

LEVEL TRANSMITTER 8131 – 20 m is a sensor for continuous level measurement.

You can find detailed information about the area of application in chapter "*Product description*".

Operational reliability is ensured only if the instrument is properly used according to the specifications in this document as well as possible supplementary instructions.

2.3 Warning about incorrect use

Inappropriate or incorrect use of this product can give rise to application-specific hazards, e.g. vessel overfill through incorrect mounting or adjustment. Damage to property and persons or environmental contamination can result. Also, the protective characteristics of the instrument can be impaired.

2.4 General safety instructions

This is a state-of-the-art instrument complying with all prevailing regulations and directives. The instrument must only be operated in a technically flawless and reliable condition. The operating company is responsible for the trouble-free operation of the instrument. When measuring aggressive or corrosive media that can cause a dangerous situation if the instrument malfunctions, the operating company has to implement suitable measures to make sure the instrument is functioning properly.

The safety instructions in this instructions manual, the national installation standards as well as the valid safety regulations and accident prevention rules must be observed.

For safety and warranty reasons, any invasive work on the device beyond that described in this instructions manual may be carried out only by personnel authorised by us. Arbitrary conversions or modifications are explicitly forbidden. For safety reasons, only the accessory specified by us must be used.

To avoid any danger, the safety approval markings and safety tips on the device must also be observed.

The low transmitting power of the radar sensor is far below the internationally approved limits. No health impairments are to be expected with intended use. The band range of the measuring frequency can be found in chapter "*Technical data*".

1052384-EN-250701

MAN 1000657629 EN Version: B Status: RL (released | freigegeben) printed: 26.06.2026

2.5 Mode of operation - Radar signal

Country or region specific settings for the radar signals are determined via the mode. The operating mode must be set in the operating menu via the respective operating tool at the beginning of the setup.

Caution:
Operating the device without selecting the relevant mode constitutes a violation of the regulations of the radio approvals of the respective country or region.

2.6 Installation and operation in the USA and Canada

This information is only valid for USA and Canada. Hence the following text is only available in the English language.

Installations in the US shall comply with the relevant requirements of the National Electrical Code (NEC - NFPA 70) (USA).

Installations in Canada shall comply with the relevant requirements of the Canadian Electrical Code (CEC Part I) (Canada).

1052384-EN-250701

MAN 1000657229 EN Version: B Status: RL (released | freigegeben) printed: 26.02.2026

3 Product description

3.1 Configuration

Scope of delivery

The scope of delivery encompasses:

- Radar sensor
- Information sheet "*Documents and software*" with:
  - Instrument serial number
  - QR code with link for direct scanning
- Information sheet "*PINs and Codes*" (with Bluetooth versions) with:
  - Bluetooth access code
- Information sheet "*Access protection*" (with Bluetooth versions) with:
  - Bluetooth access code
  - Emergency Bluetooth unlock code
  - Emergency device code

The further scope of delivery encompasses:

- Documentation
  - Ex-specific "*Safety instructions*" (with Ex versions)
  - Radio licenses
  - If necessary, further certificates

Information:
Optional instrument features are also described in this instructions. The respective scope of delivery results from the order specification.

Constituent parts

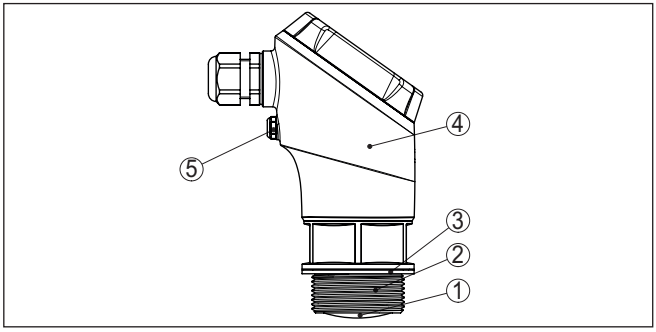

Fig. 1: Components of LEVEL TRANSMITTER 8131 – 20 m

1 Radar antenna
2 Process fitting
3 Process seal
4 Electronics housing
5 Ventilation/pressure compensation

Type label

The type label contains the most important data for identification and use of the instrument:

- Instrument type

1052384-EN-250701

MAN 1000657629 EN Version: B Status: RL (released freigegeben) printed: 26.06.2026

- Information about approvals
- Configuration information
- Technical data
- Serial number of the instrument
- QR code for device identification
- Numerical code for Bluetooth access (optional)
- Manufacturer information

3.2 Principle of operation

Application area

LEVEL TRANSMITTER 8131 – 20 m is a radar sensor for non-contact, continuous level measurement. It is suitable for liquids and solids in practically all industries.

Functional principle

The instrument emits a frequency-modulated continuous radar signal (FMCW) through its antenna. The emitted signal is reflected by the medium and received by the antenna as an echo with modified frequency. The frequency change is proportional to the distance and is converted into the level.

3.3 Adjustment

Wireless adjustment

Devices with integrated Bluetooth module can be adjusted wirelessly via smartphone/tablets (iOS or Android operating system).

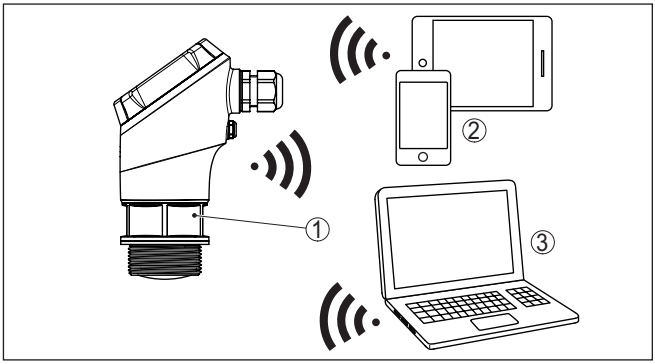

Fig. 2: Wireless connection to standard operating devices with integrated Bluetooth LE

1 Sensor
2 Smartphone/Tablet

3.4 Packaging, transport and storage

Packaging

Your instrument was protected by packaging during transport. Its capacity to handle normal loads during transport is assured by a test based on ISO 4180.

The packaging consists of environment-friendly, recyclable cardboard. For special versions, PE foam or PE foil is also used. Dispose of the packaging material via specialised recycling companies.

1052384-EN-250701

Transport

Transport must be carried out in due consideration of the notes on the transport packaging. Nonobservance of these instructions can cause damage to the device.

Transport inspection

The delivery must be checked for completeness and possible transit damage immediately at receipt. Ascertained transit damage or concealed defects must be appropriately dealt with.

Storage

Up to the time of installation, the packages must be left closed and stored according to the orientation and storage markings on the outside.

Unless otherwise indicated, the packages must be stored only under the following conditions:

- Not in the open
- Dry and dust free
- Not exposed to corrosive media
- Protected against solar radiation
- Avoiding mechanical shock and vibration

Storage and transport temperature

- Storage and transport temperature see chapter "*Technical data - Ambient conditions*"
- Relative moisture 20 … 85 %

MAN 1000657629 EN Version: B Status: RL (released | freigegeben) Printed: 26.06.2026

1052384-EN-250701

MAN 1000657629 EN Version: B Status: RL (released | freigegeben) printed: 26.03.2026

4 Mounting

4.1 General instructions

Ambient conditions

The instrument is suitable for standard and extended ambient conditions acc. to DIN/EN/BS EN/IEC/ANSI/ISA/UL/CSA 61010-1. It can be used indoors as well as outdoors.

Process conditions

Note:
For safety reasons, the instrument must only be operated within the permissible process conditions. You can find detailed information on the process conditions in chapter "*Technical data*" of the operating instructions or on the type label.

Hence make sure before mounting that all parts of the instrument exposed to the process are suitable for the existing process conditions.

These are mainly:

- Active measuring component
- Process fitting
- Process seal

Process conditions in particular are:

- Process pressure
- Process temperature
- Chemical properties of the medium
- Abrasion and mechanical influences

Permissible process pressure (MWP) - Device

The permissible process pressure range is specified on the type label with "MWP" (Maximum Working Pressure). The MWP takes into account the component with the lowest pressure and may be applied permenently. This specification refers to a reference temperature of +20 °C (+68 °F).

In addition, a temperature derating of the process fitting, e. g. with flanges, can limit the permissible process pressure range according to the respective standard.

Note:
To prevent damage to the device, a test pressure may only briefly exceed the specified MWP by 1.5 times at reference temperature.

Permissible process pressure (MWP) - Mounting accessory

The permissible process pressure range is stated on the type label. The instrument should only be operated with these pressures if the mounting accessory used also fulfils these values. This should be ensured by suitable flanges, welded sockets, tension rings with Clamp connections, sealings, etc.

Protection against moisture

Protect your instrument against moisture ingress through the following measures:

- Use a suitable connection cable (see chapter "*Connecting to power supply*")
- Tighten the cable gland or plug connector

1052384-EN-250701

MAN 1000657629 EN Version: B Status: RL (released | freigegeben) printed: 26.06.2026

- Lead the connection cable downward in front of the cable entry or plug connector

This applies mainly to outdoor installations, in areas where high humidity is expected (e.g. through cleaning processes) and on cooled or heated vessels.

Note:
Make sure that during installation or maintenance no moisture or dirt can get inside the instrument.

To maintain the housing protection, make sure that the housing lid is closed during operation and locked, if necessary.

4.2 Mounting instructions

Polarisation

Radar sensors for level measurement emit electromagnetic waves. The polarization is the direction of the electrical component of these waves.

The polarization direction is marked on the housing, see following drawing:

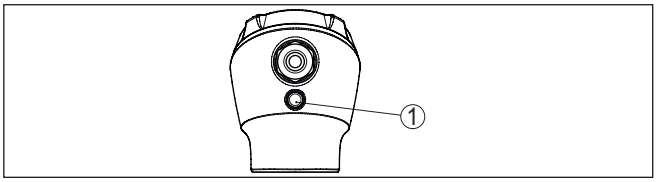

Fig. 3: Position of the polarisation

1 Marking of the polarisation

Note:
When the housing is rotated, the direction of polarization changes and hence the influence of the false echo on the measured value. Please keep this in mind when mounting or making changes later.

Installation position

When mounting the device, keep a distance of at least 200 mm (7.874 in) from the vessel wall. If the device is installed in the center of dished or round vessel tops, multiple echoes can arise. However, these can be suppressed by an appropriate adjustment (see chapter "*Set up*").

If you cannot maintain this distance, you should carry out a false signal suppression during setup. This applies particularly if buildup on the vessel wall is expected. In such cases, we recommend repeating the false signal suppression at a later date with existing buildup.

MAN 1000657629 EN Version: B Status: RL (released | freigegeben) printed: 26.06.2026

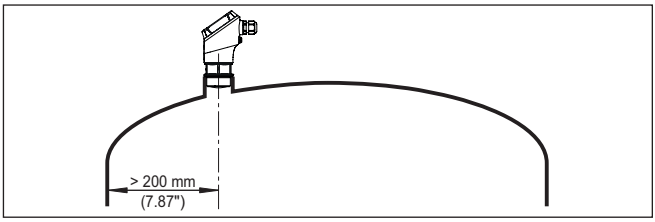

Fig. 4: Mounting of the radar sensor on round vessel tops

In vessels with conical bottom it can be advantageous to mount the device in the centre of the vessel, as measurement is then possible down to the bottom.

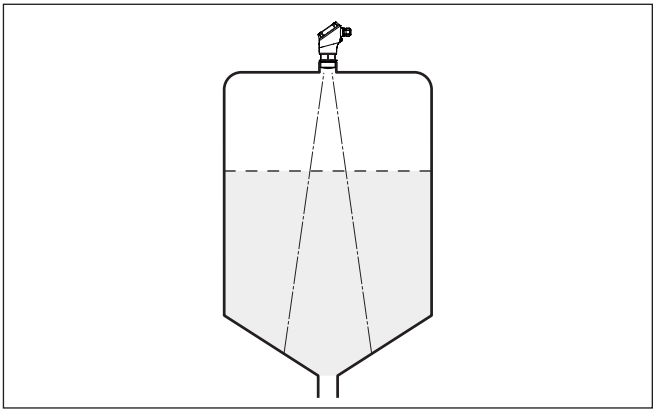

Fig. 5: Mounting of the radar sensor on vessels with conical bottom

Reference plane

The centre of the antenna lens is the beginning of the measuring range and at the same time the reference plane for the min./max. adjustment, see following diagram:

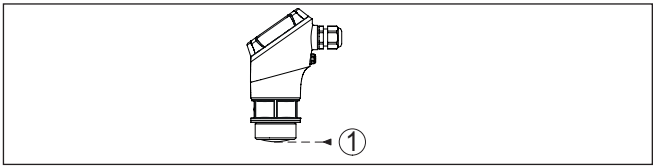

Fig. 6: Reference plane

1 Reference plane

Inflowing medium

Do not mount the instruments in or above the filling stream. Make sure that you detect the medium surface, not the inflowing product.

1052384-EN-250701

MAN 1000657629 EN Version: B Status: RL (released | freigegeben) printed: 26.06.2026

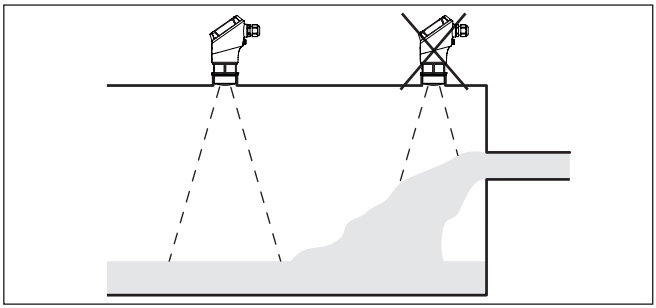

Fig. 7: Mounting of the radar sensor with inflowing medium

Threaded socket und socket piece

With threaded connection, the antenna end should protrude at least 5 mm (0.2 in) out of the nozzle.

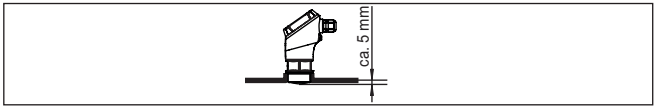

Fig. 8: Thread mounting

If the reflective properties of the medium are good, you can mount LEVEL TRANSMITTER 8131 – 20 m on sockets longer than the antenna. The socket end should be smooth and burr-free, if possible also rounded.

You will find recommended values for socket heights in the following illustration or the table. The values come from typical applications. Deviating from the proposed dimensions, also longer sockets are possible, however the local conditions must be taken into account.

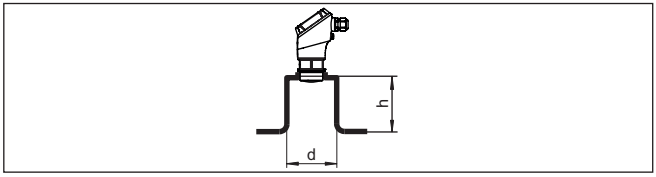

Fig. 9: Socket mounting

Socket diameter d		Socket length h	
40 mm	1½"	≤ 150 mm	≤ 5.9 in
50 mm	2"	≤ 200 mm	≤ 7.9 in
80 mm	3"	≤ 300 mm	≤ 11.8 in
100 mm	4"	≤ 400 mm	≤ 15.8 in
150 mm	6"	≤ 600 mm	≤ 23.6 in

Note:
When mounting on longer nozzles, we recommend carrying out a false signal suppression (see chapter "*Parameter adjustment*").

1052384-EN-250701

MAN 1000657629 EN Version: B Status: RL (released | freigegeben) printed: 26.06.2026

Vessel installations

The mounting location of the radar sensor should be a place where no other equipment or fixtures cross the path of the radar signals.

Vessel installations, such as e.g. ladders, limit switches, heating spirals, struts, etc., can cause false echoes and impair the useful echo. Make sure when planning your measuring point that the radar sensor has a "*clear view*" to the measured product.

In case of existing vessel installations, a false signal suppression should be carried out during setup.

If large vessel installations such as struts or supports cause false echoes, these can be attenuated through supplementary measures. Small, inclined sheet metal baffles above the installations "*scatter*" the radar signals and prevent direct interfering reflections.

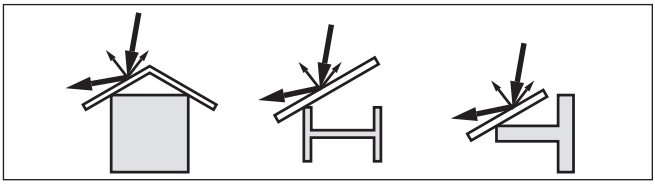

Fig. 10: Cover flat, large-area profiles with deflectors

Alignment - Liquids

In liquids, direct the device as perpendicular as possible to the medium surface to achieve optimum measurement results.

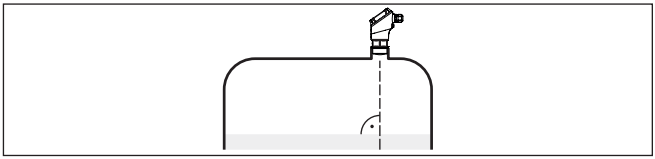

Fig. 11: Alignment in liquids

Orientation - Bulk solids

In order to measure as much of the vessel volume as possible, the device should be aligned so that the radar signal reaches the lowest level in the vessel. In a cylindrical silo with conical outlet, the sensor is mounted anywhere from one third to one half of the vessel radius from the outside wall (see following drawing).

1052384-EN-250701

MAN 1000657629 EN Version: B Status: RL (released | freigegeben) printed: 26.06.2026

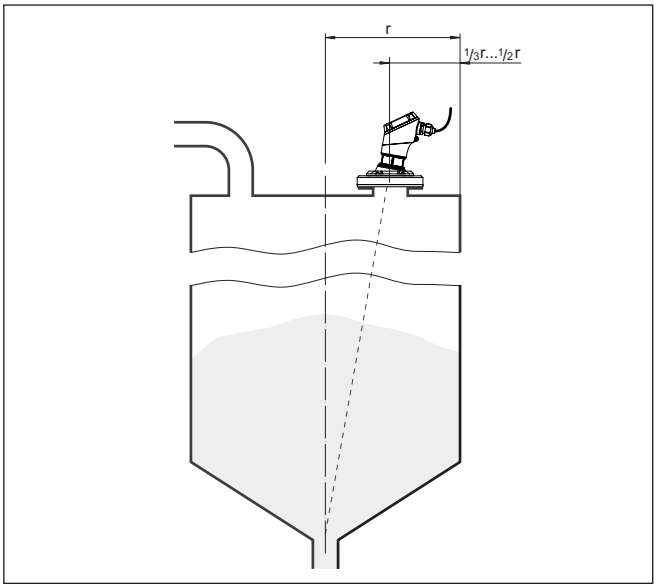

Fig. 12: Mounting position and orientation

Orientation

Due to respective socket design or with an alignment device, the device can be easily aligned to the vessel centre. The necessary angle of inclination depends on the vessel dimensions. It can be easily checked with a suitable bubble tube or mechanic's level on the sensor.

MAN 1000657629 EN Version: B Status: RL (released | freigegeben) printed: 26.06.2026

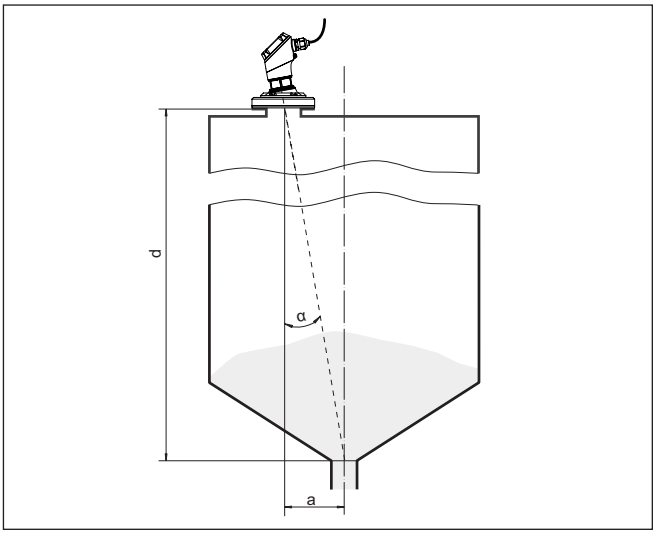

Fig. 13: Proposal for installation after orientation LEVEL TRANSMITTER 8131 – 20 m

The following table shows the necessary angle of inclination. It depends on the measuring distance and the distance "a" between vessel centre and installation position.

Distance d (m)	2°	4°	6°	8°	10°
2	0.1	0.1	0.2	0.3	0.4
4	0.1	0.3	0.4	0.6	0.7
6	0.2	0.4	0.6	0.8	1.1
8	0.3	0.6	0.8	1.1	1.4
10	0.3	0.7	1.1	1.4	1.8
15	0.5	1	1.6	2.1	2.6
20	0.7	1.4	2.1	2.8	3.5

Example:
In a vessel with 20 m height, the installation position of the sensor is 1.4 m away from the vessel center.

The necessary angle of inclination of 4° can be read out from this table.

Agitators

If there are agitators in the vessel, a false signal suppression should be carried out with the agitators in motion. This ensures that the interfering reflections from the agitators are saved with the blades in different positions.

1052384-EN-250701

MAN 1000657629 EN Version: B Status: RL (released | freigegeben) printed: 26.06.2026

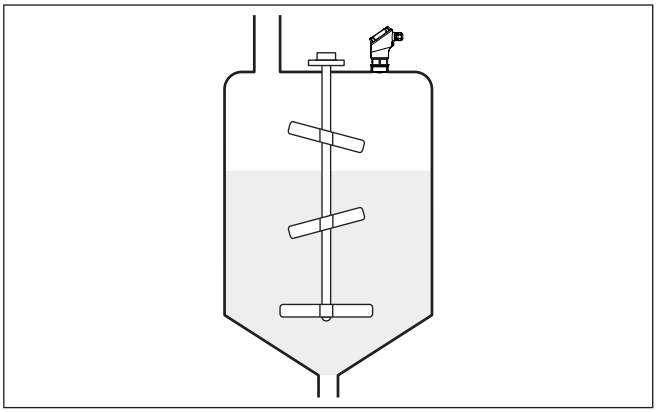

Fig. 14: Agitators

Foam generation

Through the action of filling, stirring and other processes in the vessel, compact foams which considerably damp the emitted signals may form on the medium surface.

Note:
If foams lead to measurement errors, you should use the biggest possible radar antennas or as an alternative, sensors with guided radar.

4.3 Measurement setup - Flow

Mounting

In general, the following must be observed while mounting the device:

- Mounting the sensor on the upstream or inlet side
- Installation in the centre of the flume and vertical to the liquid surface
- Distance to the overfall orifice or Venturi flume
- Distance to the max. height of the orifice or flume for optimum accuracy: > 250 mm (9.843 in)[1)]
- Requirements from approvals for flow measurement, e.g. MCERTS

Flume

Predefined curves:
A flow measurement with these standard curves is very easy to set up, as no dimensional information of the flume is required.

- Palmer-Bowlus flume ($Q = k \times h^{1.86}$)
- Venturi, trapezoidal weir, rectangular flume ($Q = k \times h^{1.5}$)
- V-Notch, triangular overfall ($Q = k \times h^{2.5}$)

Channel with dimensions according to ISO standard:
When selecting these curves, the dimensions of the flume must be known and entered via the assistant. As a result, the accuracy of the flow measurement is higher than with the specified curves.

[1)] The value given takes into account the block distance. At smaller distances, the measuring accuracy is reduced, see "Technical data".

MAN 1000657629 EN Version: B Status: RL (released | freigegeben) printed: 26.06.2026

- Rectangular flume (ISO 4359)
- Trapezoidal flume (ISO 4359)
- U-shaped flume (ISO 4359)
- Triangular overfall thin-walled (ISO 1438)
- Rectangular flume thin-walled (ISO 1438)
- Rectangular weir broad crown (ISO 3846)

Flow formula:
If the flow formula of your flume is known, you should select this option, as the accuracy of the flow measurement is highest here.

- Flow formula: $Q = k \times h^{exp}$

Manufacturer definition:
If you use a Parshall flume from the manufacturer ISCO, this option must be selected. This gives you a high accuracy of flow measurement with easy configuration.

Alternatively, you can also take over Q/h table values provided by the manufacturer here.

- ISCO Parshall flume
- Q/h table (assignment of height with corresponding flow in a table)

Tip:
Detailed project planning data can be found at the channel manufacturers and in the technical literature.

The following examples serve as an overview for flow measurement.

Rectangular overfall

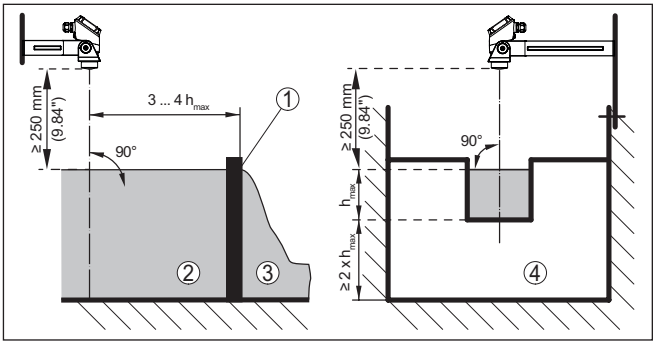

Fig. 15: Flow measurement with rectangular flume: $h_{max.}$ = max. filling of the rectangular flume

1 Overfall orifice (side view)
2 Upstream water
3 Tailwater
4 Overfall orifice (view from tailwater)

Khafagi-Venturi flume

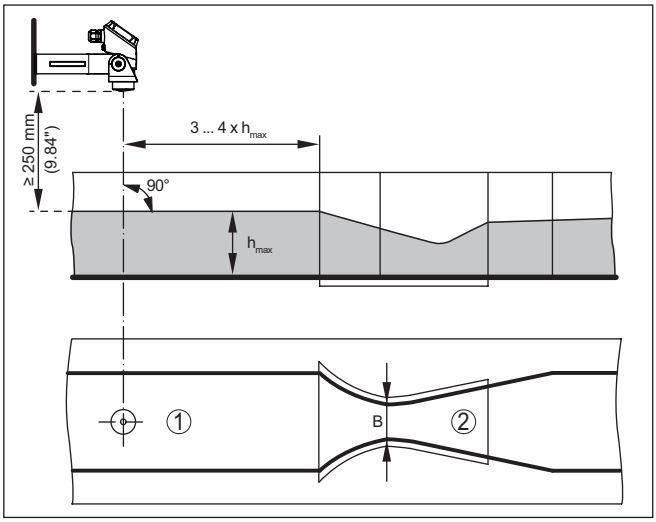

Fig. 16: Flow measurement with Khafagi-Venturi flume: $h_{max.}$ = max. filling of the flume; B = tightest constriction in the flume

1 Position sensor
2 Venturi flume

MAN 1000657629 EN Version: B Status: RL (released | freigegeben) printed: 26.06.2026

1052384-EN-250701

5 Connecting to power supply

5.1 Preparing the connection

Safety instructions

Always keep in mind the following safety instructions:

- Carry out electrical connection by trained, qualified personnel authorised by the plant operator

Warning:
Only connect or disconnect in de-energized state.

Voltage supply

The data for power supply are specified in chapter "*Technical data*".

Note:
Power the instrument via an energy-limited circuit (power max. 100 W) acc. to IEC 61010-1, e.g.:

- Class 2 power supply unit (acc. to UL1310)
- SELV power supply unit (safety extra-low voltage) with suitable internal or external limitation of the output current
- PELV power supply unit (protective low voltage) with suitable internal or external limitation of the output current

Keep in mind the following additional factors that influence the operating voltage:

- Lower output voltage of the power supply unit under nominal load (e.g. with a sensor current of 20.5 mA or 22 mA in case of fault signal)
- Influence of additional instruments in the circuit (see load values in chapter "*Technical data*")

Connection cable

Use cable with round cross section for instruments with housing and cable gland. To ensure the seal effect of the cable gland (IP protection rating), find out which cable outer diameter the cable gland is suitable for.

The instrument is connected with standard two-wire cable. If electromagnetic interference is expected which is above the test values of EN 61326-1 for industrial areas, shielded cable should be used.

Note:
Shielded cable generally necessary in HART multidrop mode.

Note:
If the temperatures are too high, the cable insulation can be damaged. Hence keep apart from the ambient temperature also the self-heating of the instrument for the temperature resistance of the cable in the connection compartment in mind.[2)]

[2)] With an ambient temperature ≥ 50 °C (122 °F) the connection cable should be suitable for a temperature which is at least 20 °C (36 °F) higher.

MAN 1000057629 EN Version: B Status: RL (released | freigegeben) printed: 26.06.2026

1052384-EN-250701

MAN 1000657629 EN Version: H Status: RL (released | freigegeben) printed: 26.06.2026

Cable gland

Metric threads
In the case of instrument housings with metric thread, the cable gland is screwed in at the factory. It is sealed with plastic plugs as transport protection.

You have to remove this plug before electrical connection.

NPT thread
In the case of instrument housings with self-sealing NPT threads, it is not possible to have the cable entry screwed in at the factory. The cable gland is therefore covered with a red dust protection cap as transport protection.

Note:
To ensure the protection class, you must replace this protective cap with an approved NPT cable gland before setup.

Note:
Do not use grease when screwing in the NPT cable gland or a conduit steel pipe.

Maximum torque see chapter "*Technical data*".

Cable screening and grounding

We recommend to connect the cable screening to ground potential at one end on the supply side when using shielded cable.

5.2 Connecting

Connection technology

The voltage supply and the signal output are connected in one of the following two ways, depending on the device version:

- Through the cable gland into the spring-loaded terminals in the housing.
- By means of a complete confectioned cable with counter plug.

The connection steps described below are not necessary when using a complete confectioned cable with counter plug.

Connection procedure

Proceed as follows:

1. Unscrew the housing lid
2. Loosen compression nut of the cable gland and remove blind plug
3. Remove approx. 10 cm (4 in) of the cable mantle, strip approx. 1 cm (0.4 in) of insulation from the ends of the individual wires
4. Insert the cable into the sensor through the cable entry

1052384-EN-250701

MAN 1000657629 EN Version: B Status: RL (released | freigegeben) printed: 26.06.2026

Fig. 17: Connection steps 5 and 6

5. Insert the wire ends into the terminals according to the bottom wiring plan

Note:
Fixed conductors and flexible conductors with ferrules can be inserted directly into the terminal openings. In the case of flexible conductors for opening the terminals, use a screwdriver (3 mm blade width) to push the actuator lever away from the terminal opening. When released, the terminals are closed again.

6. Check the hold of the wires in the terminals by lightly pulling on them
7. Tighten the compression nut of the cable entry gland. The seal ring must completely encircle the cable
8. Screw the housing lid back on

The electrical connection is finished.

1052384-EN-250701

5.3 Wiring plan

Electronics and connection compartment

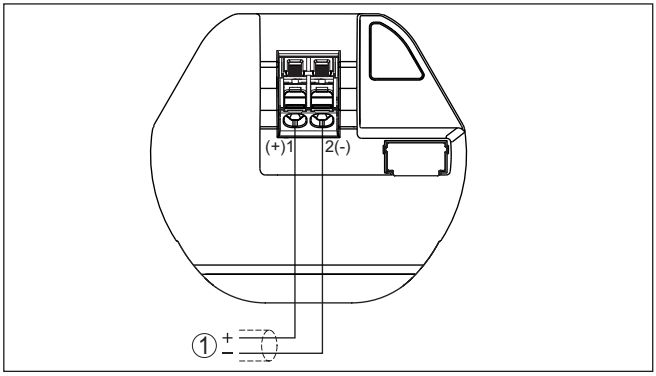

Fig. 18: Connection compartment LEVEL TRANSMITTER 8131 – 20 m

1 Voltage supply, signal output

Assignment of the plug connector

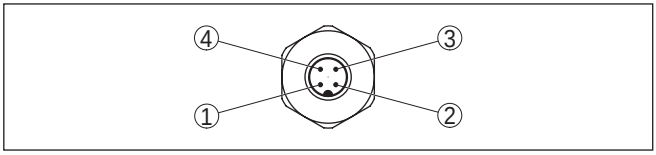

Fig. 19: Top view of the M12 x 1 plug connector

The plug connector is available in three different plug assignments.

	Assignment		
	A	**B**	**C**
1 (brown)	free	1 (+)	1 (+)
2 (white)	free	2 (-)	free
3 (blue)	2 (-)	free	2 (-)
4 (black)	1 (+)	free	free

5.4 Switch-on phase

After connection to the power supply, the device carries out a self-test:

- Internal check of the electronics
- Output signal is set to failure

The current measured value is then output on the signal cable.

MAN 1000657629 EN Version: B Status: RL (released | freigegeben) printed: 26.06.2006

1052384-EN-250701

MAN 1000657629 EN Version: B Status: RL (released | freigegeben) printed: 26.06.2026

6 Access protection

6.1 Bluetooth radio interface

Devices with a Bluetooth radio interface are protected against unwanted access from outside. This means that only authorized persons can receive measured and status values and change device settings via this interface.

Bluetooth access code

A Bluetooth access code is required to establish Bluetooth communication via the adjustment tool (smartphone/tablet/notebook). This code must be entered once when Bluetooth communication is established for the first time in the adjustment tool. It is then stored in the adjustment tool and does not have to be entered again.

The Bluetooth access code is individual for each device. It is printed on the device housing with Bluetooth. In addition, it is supplied with the device in the information sheet "*PINs and Codes*" In addition, the Bluetooth access code can be read out via the display and adjustment unit, depending on the device version.

The Bluetooth access code can be changed by the user after the first connection is established. If the Bluetooth access code is entered incorrectly, the new entry is only possible after a waiting period has elapsed. The waiting time increases with each further incorrect entry.

Emergency Bluetooth unlock code

The emergency Bluetooth access code enables Bluetooth communication to be established in the event that the Bluetooth access code is no longer known. It can't be changed. The emergency Bluetooth access code can be found in information sheet "*Access protection*". If this document is lost, the emergency Bluetooth access code can be retrieved from your personal contact person after legitimation. The storage and transmission of Bluetooth access codes is always encrypted (SHA 256 algorithm).

6.2 Protection of the parameterization

The settings (parameters) of the device can be protected against unwanted changes. The parameter protection is deactivated on delivery, all settings can be made.

Device code

To protect the parameterization, the device can be locked by the user with the aid of a freely selectable device code. The settings (parameters) can then only be read out, but not changed. The device code is also stored in the adjustment tool. However, unlike the Bluetooth access code, it must be re-entered for each unlock. When using the adjustment app, the stored device code is then suggested to the user for unlocking.

Emergency device code

The emergency device code allows unlocking the device in case the device code is no longer known. It can't be changed. The emergency device code can also be found on the supplied information sheet "*Access protection*". If this document is lost, the emergency device code can be retrieved from your personal contact person after legitimation.

1052384-EN-250701

The storage and transmission of the device codes is always encrypted (SHA 256 algorithm).

MAN 1000657629 EN Version: B Status: RL (released | freigegeben) printed: 26.06.2026

1052384-EN-250701

MAN 1000657224 EN Version: B Status: RL (released | freigegeben) printed: 26.6.2026

7 Setup with smartphone/tablet (Bluetooth)

7.1 Preparations

System requirements

Make sure that your smartphone/tablet meets the following system requirements:

- Operating system: iOS 13 or newer
- Operating system: Android 5.1 or newer
- Bluetooth 4.0 LE or newer

Download the adjustment app from the "*Apple App Store*", "*Google Play Store*" or "*Baidu Store*" to your smartphone or tablet.

7.2 Connecting

Connecting

Start the adjustment app and select the function "*Setup*". The smartphone/tablet searches automatically for Bluetooth-capable instruments in the area.

The message "*Connecting …*" is displayed.

The devices found are listed and the search is automatically continued.

Select the requested instrument in the device list.

Authenticate

When establishing the connection for the first time, the operating tool and the sensor must authenticate each other. After the first correct authentication, each subsequent connection is made without a new authentication query.

Enter Bluetooth access code

For authentication, enter the 6-digit Bluetooth access code in the next menu window. You can find the code on the outside of the device housing and on the information sheet "*Pins and Codes*" in the device packaging.

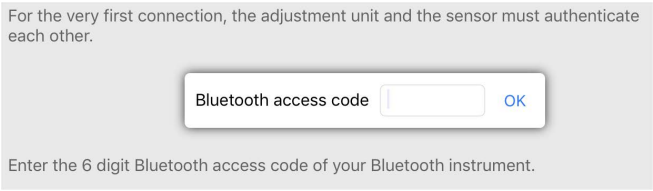

Fig. 20: Enter Bluetooth access code

Note:
If an incorrect code is entered, the code can only be entered again after a delay time. This time gets longer after each incorrect entry.

The message "*Waiting for authentication*" is displayed on the smartphone/tablet.

Connected

After connection, the sensor adjustment menu is displayed on the respective adjustment tool.

1052384-EN-250701

MAN 1000657629 EN Version: B Status: RL (released | freigegeben) printed: 26.06.2026

If the Bluetooth connection is interrupted, e.g. due to a too large distance between the two devices, this is displayed on the adjustment tool. The message disappears when the connection is restored.

Change device code

Parameter adjustment of the device is only possible if the parameter protection is deactivated. When delivered, parameter protection is deactivated by default and can be activated at any time.

It is recommended to enter a personal 6-digit device code. To do this, go to menu "*Extended functions*", "*Access protection*", menu item "*Protection of the parameter adjustment*".

7.3 Parameter adjustment

Enter parameters

The sensor adjustment menu is divided into two areas, which are arranged next to each other or one below the other, depending on the adjustment tool.

- Navigation section
- Menu item display

The selected menu item can be recognized by the colour change.

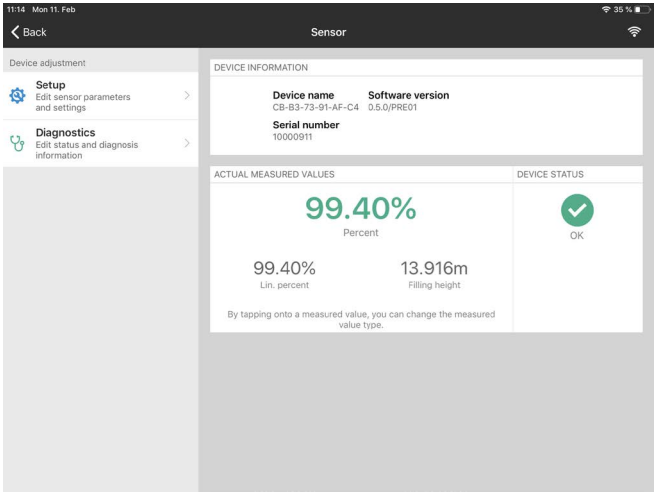

Fig. 21: Example of an app view - Setup measured values

Enter the requested parameters and confirm via the keyboard or the editing field. The settings are then active in the sensor.

Close the app to terminate connection.

1052384-EN-250701

8 Adjustment menu

8.1 Menu overview

Start image

Device information	Actual measured values	Device status
Device name, software version, serial number	Percent, filling height, distance, measurement reliability, electronics temperature, meas. rate etc.	OK, error indication

Basic functions

Menu item	Selection	Basic settings
Measurement loop name	Alphanumeric characters	Sensor
Application liquid	Storage tank, agitator tank, dosing tank, pumping station/pump shaft, rain overflow basin, tank/collection basin, plastic tank (measurement through tank top), mobile plastic tank (IBC), level measurement in waters, flow measurement flume/overflow, demonstration	Storage tank
Application bulk solid	Silo (slim and high), bunker (large volume), stockpile (point measurement/profile detection), crusher, demonstration	Silo (slender and high)
Units	Distance unit of the device Temperature unit of the instrument	Distance in m Temperature in °C
Adjustment	Max. adjustment (distance A) Min. adjustment (distance B)	Max. adjustment 0,000 m Min. adjustment 20,000 m

Extended functions

Menu item	Selection	Basic settings
Damping	Integration time	0 s
Current output	Output characteristics	0 … 100 % correspond to 4 … 20 mA
	Current range	3.8 … 20.5 mA
	Reaction when malfunctions occur	< 3.6 mA
Linearisation	Linearization type	Linear
Scaling	Scaling size Scaling unit Scaling format 100 % correspond to 0 % correspond to	Volume l 100 l 0 l
Display	Menu language Displayed value Backlight	- Distance On
Access protection	Bluetooth access code	-
	Protection of the parameterization	Deactivated

MAN 1000057029 EN Version: B Status: RL (released | freigegeben) printed: 16.09.2026

1052384-EN-250701

Menu item	Selection	Basic settings
False signal suppression	Create new, extend, delete, manual entry	0 m
	Sounded distance to the medium	0 m
Interference behaviour	Last measured value, maintenance message, fault signal	Last measured value
	Time until fault signal	15 s
HART variables	First HART value (PV) Second HART value (SV) Third HART value (TV) Fourth HART value (QV) Long TAG Message	Lin. percent Distance Measurement reliability Electronics temperature
Reset	Delivery status, basic settings	-
Mode of operation	Mode of operation 1: EU, Albania, Andorra, Azerbaijan, Australia, Belarus, Bosnia and Herzegovina, Canada, Egypt, Iceland, Liechtenstein, Moldavia, Monaco, Montenegro, Morocco, New Zealand, Northern Macedonia, Norway, San Marino, Saudi Arabia, Serbia, South-Africa, Switzerland, Turkey, Ukraine, United Kingdom, USA Mode of operation 2: Brazil, Japan, South Korea, Taiwan, Thailand Mode of operation 3: Chile, India, Malaysia, Zimbabwe Mode of operation 4: Russia, Kazakhstan	Mode of operation 1
Status signals	Function check Maintenance required Out of specification	On Off Off

Diagnostics

Menu item	Selection	Basic settings
Status	Device status Parameter modification counter Measured value status Status output HART Device Status Status additional measured values	-
Echo curve	Indication of echo curve	-
Peak indicator	Peak indicator distance, measurement reliability, meas. rate, electronic temperature	-
Measured values	Measured values Additional measured values Outputs	-
Sensor information	Device name, serial number, hardware/software version, device revision, factory calibration date	-
Sensor characteristics	Sensor features from order text	-

MAN 1000007629 EN Version: B Status: RL (released | freigegeben) printed: 26.06.2020
1052384-EN-250701

Menu item	Selection	Basic settings
Simulation	Measured value Simulation value	-

MAN 1000657629 EN Version: B Status: RL (released | freigegeben) printed: 26.06.2025

8.2 Description of the applications

Application

This menu item enables you to optimally adapt the sensor to the application, the place of use and the measuring conditions. The adjustment possibilities depend on the selection made under "*Medium*", "*Liquid*" or "*Bulk solid*".

The vessels as well as the measuring and process conditions are described in the following as an overview.

Application - liquid

With "*Liquid*", the applications are based on the following features, to which the measuring characteristic of the sensor is adjusted in particular:

Storage tank
- Vessel:
  - Large volume
  - Upright cylindrical, horizontal round
- Process/measurement conditions:
  - Slow filling and emptying
  - Smooth medium surface
  - Multiple reflections from dished vessel ceiling
  - Condensation

Stirrer vessel
- Vessel:
  - Large agitator blades of metal
  - Installations like flow breakers, heating spirals
  - Nozzle
- Process/measurement conditions:
  - Frequent, fast to slow filling and emptying
  - Strongly agitated surface, foam and strong vortex generation
  - Multiple reflections through dished vessel ceiling
  - Condensation, buildup on the sensor
- Further recommendations
  - False signal suppression when the agitator is running via the operating tool

Dosing vessel
- Vessel:
  - Small vessels
- Process/measurement conditions:
  - Frequent and fast filling/emptying
  - Tight installation situation
  - Multiple reflections through dished vessel ceiling
  - Product buildup, condensate and foam generation

Pumping station/Pump shaft
- Process/measurement conditions:

1052384-EN-250701

MAN 1000657629 EN Version: B Status: RL (released | freigegeben) printed: 26.06.2026

  - Partly strongly agitated surface
  - Installations such as pumps and ladders
  - Multiple reflections through flat vessel ceiling
  - Dirt and grease deposits on shaft wall and sensor
  - Condensation on the sensor
- Further recommendations
  - False signal suppression via the operating tool

Overflow basin

- Vessel:
  - Large volume
  - Partly installed underground
- Process/measurement conditions:
  - Partly strongly agitated surface
  - Multiple reflections through flat vessel ceiling
  - Condensation, dirt deposits on the sensor
  - Flooding of the sensor antenna

Vessel/Collecting basin

- Vessel:
  - Large volume
  - Upright cylindrical or rectangular
- Process/measurement conditions:
  - Slow filling and emptying
  - Smooth medium surface
  - Condensation

Plastic tank (measurement through the vessel top)

- Process/measurement conditions:
  - Measurement through the tank top, if appropriate to the application
  - Condensation on the plastic ceiling
  - In outdoor facilities, water and snow on vessel top possible
- Further recommendations
  - When measuring through the tank ceiling, false signal suppression via the operating tool
  - When measuring through the tank top in outdoor areas protective roof for the measuring point

Transportable plastic tank (IBC)

- Process/measurement conditions:
  - Material and thickness different
  - Measurement through the vessel top, if appropriate to the application
  - Changed reflection conditions as well as jumps in measured values when changing vessels
- Further recommendations
  - When measuring through the tank ceiling, false signal suppression via the operating tool
  - When measuring through the tank top in outdoor areas protective roof for the measuring point

1052384-EN-250701

MAN 1000657629 EN Version: B Status: RL (released | freigegeben) printed: 26.06.2026

Gauge measurement in waters

- Process/measurement conditions:
  - Slow gauge change
  - Extreme damping of output signal in case of wave generation
  - Ice and condensation on the antenna possible
  - Floating debris sporadically on the water surface

Flow measurement flume/Overfall

- Process/measurement conditions:
  - Slow gauge change
  - Smooth to agitated water surface
  - Measurement often from a short distance with the demand for accurate measurement results
  - Ice and condensation on the antenna possible

Demonstration

- Applications that are not typical level measurements, e.g. device tests
  - Instrument demonstration
  - Object recognition/monitoring
  - Fast position changes of a measuring plate during functional test

Application - bulk solid

With "*Bulk solid*", the applications are based on the following features, to which the measuring characteristic of the sensor is adjusted in particular:

Silo (slender and high)

- Process/measurement conditions:
  - Interfering reflections due to weld seams on the vessel
  - Multiple echoes/diffuse reflections due to unfavourable pouring positions with fine grain
  - Varying pouring positions due to outlet funnel and filling cone
- Further recommendations
  - False signal suppression via the operating tool
  - Alignment of the measurement to the silo outlet

Bunker (large-volume)

- Process/measurement conditions:
  - Large distance to the medium
  - Steep angles of repose, unfavourable pouring positions due to outlet funnel and filling cone
  - Diffuse reflections due to structured vessel walls or internals
  - Multiple echoes/diffuse reflections due to unfavourable pouring positions with fine grain
  - Changing signal conditions when large amounts of material slip off
- Further recommendations
  - False signal suppression via the operating tool

Heap (point measurement/profile detection)

- Process/measurement conditions:
  - Measured value jumps, e.g. through heap profile and traverses

1052384-EN-250701

MAN 1000657629 EN Version: B Status: RL (released | freigegeben) printed: 26.06.2026

- Large angles of repose, varying pouring positions
- Measurement near the filling stream
- Sensor mounting on movable conveyor belts

Crusher

- Process/measurement conditions:
  - Measured value jumps and varying pouring positions, e.g. due to truck filling
  - Fast reaction time
  - Large distance to the medium
  - Interfering reflections from fixtures or protective devices
- Further recommendations
  - False signal suppression via the operating tool

Demonstration

- Applications that are not typical level measurements
  - Instrument demonstration
  - Object recognition/monitoring
  - Measured value verification with higher measuring accuracy with reflection without bulk solids, e.g. via a measuring plate

1052384-EN-250701

MAN 1000657629 EN Version: G Status: RL (released | freigegeben) printed: 26.03.2026

9 Diagnostics and servicing

9.1 Maintenance

Maintenance

If the device is used properly, no special maintenance is required in normal operation.

Precaution measures against buildup

In some applications, buildup on the antenna system can influence the measuring result. Depending on the sensor and application, take measures to avoid heavy soiling of the antenna system. If necessary, clean the antenna system in certain intervals.

Cleaning

The cleaning helps that the type label and markings on the instrument are visible.

Take note of the following:

- Use only cleaning agents which do not corrode the housings, type label and seals
- Use only cleaning methods corresponding to the housing protection rating

9.2 Rectify faults

Reaction when malfunction occurs

The operator of the system is responsible for taking suitable measures to rectify faults.

Causes of malfunction

The device offers maximum reliability. Nevertheless, faults can occur during operation. These may be caused by the following, e.g.:

- Sensor
- Process
- Voltage supply
- Signal processing

Fault rectification

The first measures are:

- Evaluation of fault messages
- Checking the output signal
- Treatment of measurement errors

A smartphone/tablet with the adjustment app offer you further comprehensive diagnostic possibilities. In many cases, the reasons can be determined in this way and faults rectified.

Reaction after fault rectification

Depending on the reason for the fault and the measures taken, the steps described in chapter "*Setup*" must be carried out again or must be checked for plausibility and completeness.

9.3 Diagnosis, fault messages

4 … 20 mA signal

Connect a multimeter in the suitable measuring range according to the wiring plan. The following table describes possible errors in the current signal and helps to eliminate them:

1052384-EN-250701

Error	Cause	Rectification
4 … 20 mA signal not stable	Fluctuating measured value	Set damping
4 … 20 mA signal missing	Electrical connection faulty	Check connection, correct, if necessary
	Voltage supply missing	Check cables for breaks; repair if necessary
	Operating voltage too low, load resistance too high	Check, adapt if necessary
Current signal greater than 22 mA, less than 3.6 mA	Sensor electronics defective	Replace device or send in for repair depending on device version

9.4 Status messages according to NE 107

The instrument features self-monitoring and diagnostics according to NE 107 and VDI/VDE 2650. In addition to the status messages in the following tables there are more detailed error messages available under the menu item "*Diagnostics*" via the respective adjustment module.

Status messages

The status messages are divided into the following categories:

- Failure
- Function check
- Out of specification
- Maintenance required

and explained by pictographs:

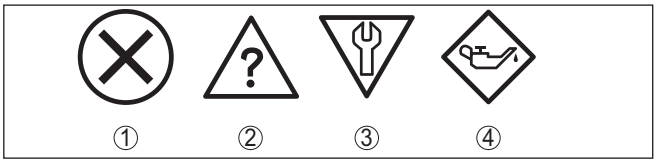

Fig. 22: Pictographs of the status messages

1 Failure - red
2 Out of specification - yellow
3 Function check - orange
4 Maintenance required - blue

Malfunction (Failure):
Due to a malfunction in the instrument, a fault signal is output.

This status message is always active. It cannot be deactivated by the user.

Function check:
The instrument is being worked on, the measured value is temporarily invalid (for example during simulation).

This status message is inactive by default.

Out of specification:
The measured value is unreliable because an instrument specification was exceeded (e.g. electronics temperature).

MAN 1000657629 EN Version: B Status: RL (released | freigegeben) printed: 26.06.2026

1052384-EN-250701

MAN 1000057629 EN Version: B Status: RL (released | freigegeben) printed: 26.06.2026

This status message is inactive by default.

Maintenance required:
Due to external influences, the instrument function is limited. The measurement is affected, but the measured value is still valid. Plan in maintenance for the instrument because a failure is expected in the near future (e.g. due to buildup).

This status message is inactive by default.

Failure

Code Text message	Cause	Rectification	DevSpec State in CMD 48
F013 no measured value available	Sensor does not detect an echo during operation Antenna system dirty or defective	Check or correct installation and/or parameter settings Clean or exchange process component or antenna	Byte 5, Bit 0 of Byte 0 … 5
F017 Adjustment span too small	Adjustment not within specification	Change adjustment according to the limit values (difference between min. and max. ≥ 10 mm)	Byte 5, Bit 1 of Byte 0 … 5
F025 Error in the linearization table	Index markers are not continuously rising, for example illogical value pairs	Check linearization table Delete table/Create new	Byte 5, Bit 2 of Byte 0 … 5
F036 No operable software	Failed or interrupted software update	Repeat software update Check electronics version Exchanging the electronics Send instrument for repair	Byte 5, Bit 3 of Byte 0 … 5
F040 Error in the electronics	Hardware defect	Exchanging the electronics Send instrument for repair	Byte 5, Bit 4 of Byte 0 … 5
F080 General software error	General software error	Disconnect operating voltage briefly	Byte 5, Bit 5 of Byte 0 … 5
F105 Determine measured value	The instrument is still in the switch-on phase, the measured value could not yet be determined	Wait for the end of the switch-on phase Duration up to approx. 3 minutes depending on the version and parameter settings	Byte 5, Bit 6 of Byte 0 … 5
F113 Communication error	EMC interference	Remove EMC influences	Byte 4, Bit 4 of Byte 0 … 5
F125 Impermissible electronics temperature	Temperature of the electronics in the non-specified range	Check ambient temperature Insulate electronics Use instrument with higher temperature range	Byte 5, Bit 7 of Byte 0 … 5
F260 Error in the calibration	Error in the calibration carried out in the factory Error in the EEPROM	Exchanging the electronics Send instrument for repair	Byte 4, Bit 0 of Byte 0 … 5

1052384-EN-250701

Code Text message	Cause	Rectification	DevSpec State in CMD 48
F261 Error in the instrument settings	Error during setup False signal suppression faulty Error when carrying out a reset	Repeat setup Carry out a reset	Byte 4, Bit 1 of Byte 0 … 5
F264 Installation/Setup error	Adjustment not within the vessel height/measuring range Max. measuring range of the instrument not sufficient	Check or correct installation and/or parameter settings Use an instrument with bigger measuring range	Byte 4, Bit 2 of Byte 0 … 5
F265 Measurement function disturbed	Sensor no longer carries out a measurement Operating voltage too low	Check operating voltage Carry out a reset Disconnect operating voltage briefly	Byte 4, Bit 3 of Byte 0 … 5

Function check

Code Text message	Cause	Rectification	DevSpec State in CMD 48
C700 Simulation active	A simulation is active	Finish simulation Wait for the automatic end after 60 mins.	"Simulation Active" in "Standardized Status 0"

Out of specification

Code Text message	Cause	Rectification	DevSpec State in CMD 48
S600 Impermissible electronics temperature	Temperature of the electronics in the non-specified range	Check ambient temperature Insulate electronics	Byte 23, Bit 4 of Byte 14 … 24
S601 Overfilling	Danger of vessel overfilling	Make sure that there is no further filling Check level in the vessel	Byte 23, Bit 5 of Byte 14 … 24
S603 Impermissible operating voltage	Terminal voltage too small	Check terminal voltage, increase operating voltage	Byte 23, Bit 6 of Byte 14 … 24

Maintenance

Code Text message	Cause	Rectification	DevSpec State in CMD 48
M500 Error during the reset "delivery status"	The data could not be restored during the reset to delivery status	Repeat reset Load XML file with sensor data into the sensor	Byte 24, Bit 0 of Byte 14 … 24
M501 Error in the non-active linearisation table	Hardware error EEPROM	Exchanging the electronics Send instrument for repair	Byte 24, Bit 1 of Byte 14 … 24

MAN 1000075256 EN Version: B Status: RL (released | freigegeben) printed: 20.06.2022

Code Text message	Cause	Rectification	DevSpec State in CMD 48
M504 Error at a device interface	Hardware defect	Check connections Exchanging the electronics Send instrument for repair	Byte 24, Bit 4 of Byte 14 … 24
M505 No echo available	Sensor does not detect an echo during operation Antenna dirty or defective	Clean the antenna Use a more suitable antenna/ sensor Remove possible false echoes Optimize sensor position and orientation	Byte 24, Bit 5 of Byte 14 … 24
M506 Installation/Setup error	Error during setup	Check or correct installation and/ or parameter settings	Byte 24, Bit 6 of Byte 14 … 24
M507 Error in the instrument settings	Error during setup Error when carrying out a reset False signal suppression faulty	Carry out reset and repeat setup	Byte 24, Bit 7 of Byte 14 … 24

MAN 1000657629 EN Version: B Status: RL (released | freigegeben) printed: 26.06.2025

9.5 Treatment of measurement errors

The tables below give typical examples of application-related measurement errors.

The images in column "*Error description*" show the actual level as a dashed line and the output level as a solid line.

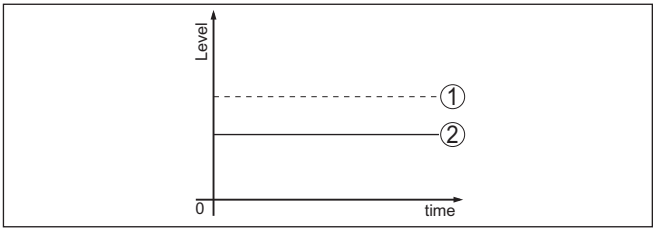

1 Real level
2 Level displayed by the sensor

Note:
If the output level is constant, the cause could also be the fault setting of the current output to "*Hold value*".

If the level is too low, the reason could be a line resistance that is too high

1052384-EN-250701

Liquids: Measurement error at constant level

Fault description	Cause	Rectification
Measured value shows a too low or too high level 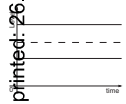	Min./max. adjustment not correct	Adapt min./max. adjustment
	Incorrect linearization curve	Adapt linearization curve
Measured value jumps towards 100 % 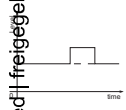	Due to the process, the amplitude of the level echo sinks A false signal suppression was not carried out	Carry out a false signal suppression
	Amplitude or position of a false signal has changed (e.g. condensation, build-up); false signal suppression no longer matches actual conditions	Determine the reason for the changed false signals, carry out false signal suppression, e.g. with condensation.

Liquids: Measurement error during filling

Fault description	Cause	Rectification
Measured value remains unchanged during filling 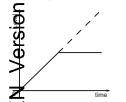	False signals in the close range too big or level echo too small Strong foam or vortex generation Max. adjustment not correct	Eliminate false signals in the close range Check measuring point: Antenna should protrude out of the threaded mounting socket, possible false echoes through flange socket? Remove contamination on the antenna In case of interferences due to installations in the close range, change polarisation direction Create a new false signal suppression Adapt max. adjustment
Measured value jumps towards 0 % during filling 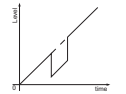	The level echo cannot be distinguished from the false signal at a false signal position (jumps to multiple echo)	In case of interferences due to installations in the close range: Change polarisation direction Chose a more suitable installation position
Measured value jumps towards 100 % during filling 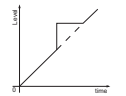	Due to strong turbulence and foam generation during filling, the amplitude of the level echo sinks. Measured value jumps to false signal	Carry out a false signal suppression

MAN 1000657629 EN Version: B Status: RL (released | freigegeben) printed: 26.09.2022

Fault description	Cause	Rectification
Measured value jumps spontaneously to 100 % during filling	Varying condensation or contamination on the antenna	Carry out a false signal suppression or increase false signal suppression with condensation/contamination in the close range by editing
Measured value jumps to > 100 % or 0 m distance 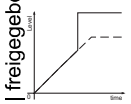	Level echo is no longer detected in the close range due to foam generation or false signals in the close range. The sensor goes into overfill protection mode. The max. level (0 m distance) as well as the status message "*Overfill protection*" are output.	Check measuring point: Antenna should protrude out of the threaded mounting socket, possible false echoes through flange socket? Remove contamination on the antenna

Liquids: Measurement error during emptying

Fault description	Cause	Rectification
Measured value remains unchanged in the close range during emptying	False signal larger than the level echo Level echo too small	Check measuring point: Antenna should protrude out of the threaded mounting socket, possible false echoes through flange socket? Remove contamination on the antenna In case of interferences due to installations in the close range: Change polarisation direction After eliminating the false signals, the false signal suppression must be deleted. Carry out a new false signal suppression
Measured value jumps spontaneously towards 100 % during emptying 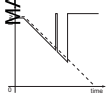	Varying condensation or contamination on the antenna	Carry out false signal suppression or increase false signal suppression in the close range by editing With bulk solids, use radar sensor with purging air connection

Bulk solids: Measurement error at constant level

Fault description	Cause	Rectification
Measured value shows a too low or too high level 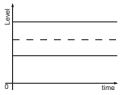	Min./max. adjustment not correct	Adapt min./max. adjustment
	Incorrect linearization curve	Adapt linearization curve

MAN 1000657629 EN Version: B Status: RL (released | freigegeben) printed: 26.06.2025

1052384-EN-250701

Fault description	Cause	Rectification
Measured value jumps towards 100 % 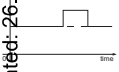	Due to the process, the amplitude of the product echo decreases A false signal suppression was not carried out	Carry out a false signal suppression
	Amplitude or position of a false signal has changed (e.g. condensation, build-up); false signal suppression no longer matches actual conditions	Determine the reason for the changed false signals, carry out false signal suppression, e.g. with condensation.

Bulk solids: Measurement error during filling

Fault description	Cause	Rectification
Measured value jumps towards 0 % during filling 	The level echo cannot be distinguished from the false signal at a false signal position (jumps to multiple echo)	Remove/reduce false signal: minimize interfering installations by changing the polarization direction Chose a more suitable installation position
	Transverse reflection from an extraction funnel, amplitude of the transverse reflection larger than the level echo	Direct sensor to the opposite funnel wall, avoid crossing with the filling stream
Measured value fluctuates around 10 … 20 % 	Various echoes from an uneven medium surface, e.g. a material cone	Check parameter "Material Type" and adapt, if necessary Optimize installation position and sensor orientation
	Reflections from the medium surface via the vessel wall (deflection)	Select a more suitable installation position, optimize sensor orientation, e.g. with a swivelling holder
Measured value jumps spodically to 100 % during filling 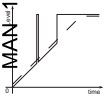	Changing condensation or contamination on the antenna	Carry out a false signal suppression or increase false signal suppression with condensation/contamination in the close range by editing

Bulk solids: Measurement error during emptying

Fault description	Cause	Rectification
Measured value remains unchanged in the close range during emptying 	False signal greater than level echo or level echo too small	Eliminate false signals in the close range. Check: Antenna must protrude out of the nozzle Remove contamination on the antenna Minimize interfering installations in the close range by changing the polarization direction After eliminating the false signals, the false signal suppression must be deleted. Carry out a new false signal suppression

MAN 1000057629 EN Version: B Status: RL (released | freigegeben) printed: 26.06.2025

1052384-EN-250701

Fault description	Cause	Rectification
Measured value jumps spontaneously towards 100 % during emptying	Changing condensation or contamination on the antenna	Carry out false signal suppression or increase false signal suppression in the close range by editing
Measured value fluctuates around 10 … 20 %	Various echoes from an uneven medium surface, e.g. an extraction funnel	Check parameter "Material Type" and adapt, if necessary
	Reflections from the medium surface via the vessel wall (deflection)	Optimize installation position and sensor orientation

9.6 How to proceed if a repair is necessary

If a repair should be necessary, please contact your contact person.

MAN 1000657629 EN Version: B Status: RL (released | freigegeben) printed: 26.05.2025

1052384-EN-250701

10 Dismount

10.1 Dismounting steps

To remove the device, carry out the steps in chapters "*Mounting*" and "*Connecting to power suplly*" in reverse.

Warning:
When dismounting, pay attention to the process conditions in vessels or pipelines. There is a risk of injury, e.g. due to high pressures or temperatures as well as aggressive or toxic media. Avoid this by taking appropriate protective measures.

10.2 Disposal

Pass the instrument on to a specialised recycling company and do not use the municipal collecting points.

Remove any batteries in advance, if they can be removed from the device, and dispose of them separately.

If personal data is stored on the old device to be disposed of, delete it before disposal.

If you have no way to dispose of the old instrument properly, please contact us concerning return and disposal.

MAN 1000657629 EN Version: B Status: RL (released | freigegeben) printed: 26.06.2026

1052384-EN-250701

MAN 1000657629 EN Version: B Status: RL (released | freigegeben) printed: 26.06.2026

11 Certificates and approvals

11.1 Radio licenses

Radar
The device has been tested and approved in accordance with the current edition of the applicable country-specific norms or standards.

Regulations for use can be found in the document "*Regulations for radar level measuring instruments with radio licenses*" on our homepage.

Bluetooth
The Bluetooth radio module in the device has been tested and approved according to the current edition of the applicable country-specific norms or standards.

The confirmations as well as regulations for use can be found in the document "*Radio licenses*" supplied or on our homepage.

11.2 Approvals for Ex areas

Approved versions for use in hazardous areas are available or in preparation for the device or the device series.

You can find the relevant documents on our homepage.

11.3 Approvals as overfill protection

Approved versions for use as part of an overfill protection system are available or in preparation for the device or the device series.

The corresponding approvals can be found on our homepage.

11.4 Metrological approvals

Approved versions, e.g. as certified measuring system for flow according to MCERTS, are available or in preparation for the device series.

Regulations for use can be found in the corresponding certificate on our homepage.

11.5 Food and pharmaceutical certificates

Versions for use in the food and pharmaceutical industries are available or in preparation for the device or the device series.

The corresponding certificates can be found on our homepage.

11.6 Conformity

The device complies with the legal requirements of the applicable country-specific directives or technical regulations. We confirm conformity with the corresponding labelling.

The corresponding conformity declarations can be found on our homepage.

1052384-EN-250701

11.7 NAMUR recommendations

NAMUR is the automation technology user association in the process industry in Germany. The published NAMUR recommendations are accepted as the standard in field instrumentation.

The device fulfils the requirements of the following NAMUR recommendations:

- NE 21 – Electromagnetic compatibility of equipment
- NE 43 – Signal level for fault information from measuring transducers
- NE 53 – Compatibility of field devices and display/adjustment components
- NE 107 – Self-monitoring and diagnosis of field devices

For further information see www.namur.de.

MAN 1000657629 EN Version: B Status: RL (released | freigegeben) printed: 26.06.2026

1052384-EN-250701

12 Supplement

12.1 Technical data

Note for approved instruments

The technical data in the respective safety instructions which are included in delivery are valid for approved instruments (e.g. with Ex approval). These data can differ from the data listed herein, for example regarding the process conditions or the voltage supply.

All approval documents can be downloaded from our homepage.

Materials and weights	
Materials, wetted parts	
Antenna, process fitting	PVDF
Process seal[3)]	FKM, EPDM
Materials, non-wetted parts	
Housing	Plastic PBT (Polyester)
Housing seals	O-rings (silicone)
Cable gland	PA
Sealing, cable gland	EPDM
Blind plug, cable gland	PA
Weight	0.7 kg (1.543 lbs)
Torques	
Max. torque mounting boss	7 Nm (5.163 lbf ft)
Max. torque for NPT cable glands and Conduit tubes	10 Nm (7.376 lbf ft)
Input variable	
Measured variable	The measured variable is the distance between the antenna edge of the sensor and the medium surface. The antenna edge is also the reference plane for the measurement.

MAN 1000057623 EN Version: B Status: RL (released | freigegeben) printed: 26.06.2026

[3)] G type threaded connections only, EPDM for devices with food/pharmaceutical certification

1052384-EN-250701

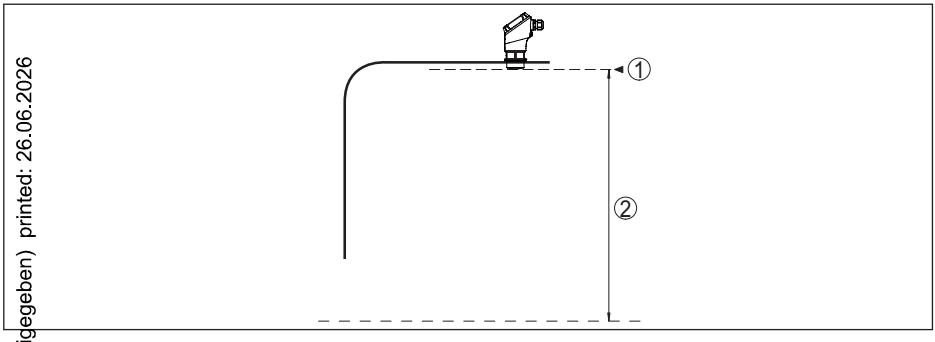

Fig. 23: Data of the input variable

1 Reference plane
2 Measured variable, max. measuring range

Max. measuring range[4]	20 m (65.62 ft)
Recommended measuring range[5]	up to 10 m (32.81 ft)
blocking distance[6]	
– Modes of operation 1, 2, 4	0 mm (0 in)
– Mode of operation 3	≥ 250 mm (9.843 in)

Switch-on phase

Run-up time for U_B = 12 V DC, 18 V DC, 24 V DC	< 15 s
Starting current for run-up time	≤ 3.6 mA

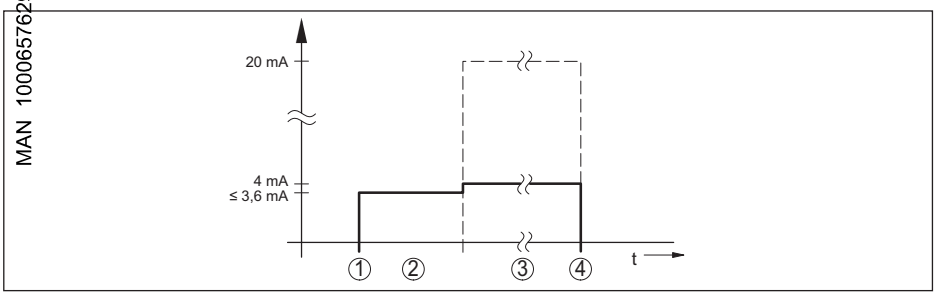

Fig. 24: Run-up time and measured value output

1 U_B On
2 Run-up time
3 Measured value output
4 U_B Off

[4] Depending on application, medium as well as specifications by metrological approvals
[5] With bulk solids
[6] Depending on the operating conditions

MAN 1000057629 EN Version: B Status: RL (released | freigegeben) printed: 26.06.2026

Power consumption

Sensor current	Operating voltage		
	12 V DC	18 V DC	24 V DC
3.6 mA	< 45 mW	< 65 mW	< 90 mW
4 mA	< 50 mW	< 75 mW	< 100 mW
22 mA	< 245 mW	< 370 mW	< 485 mW

Output variable

Output signal	4 … 20 mA/HART
Range of the output signal	3.8 … 20.5 mA/HART (default setting)
Signal resolution	0.3 µA
Resolution, digital	1 mm (0.039 in)
Fault signal, current output (adjustable)	≤ 3.6 mA, ≥ 21 mA, last valid measured value
Max. output current	22 mA
Starting current	≤ 3.6 mA; ≤ 10 mA for 5 ms after switching on
Load	See load resistance under Power supply
Damping (63 % of the input variable), adjustable	0 … 999 s
HART output values[7]	
– PV (Primary Value)	Lin. percent
– SV (Secondary Value)	Distance
– TV (Third Value)	Measurement reliability
– QV (Fourth Value)	Electronics temperature
Fulfilled HART specification	7.0
Further information on Manufacturer ID, Device ID, Device Revision	See website of FieldComm Group

Deviation (according to DIN EN 60770-1)

Process reference conditions according to DIN EN 61298-1	
– Temperature	+18 … +30 °C (+64 … +86 °F)
– Relative humidity	45 … 75 %
– Air pressure	860 … 1060 mbar/86 … 106 kPa (12.5 … 15.4 psig)
Installation reference conditions	
– Distance to installations	> 200 mm (7.874 in)
– Reflector	Flat plate reflector
– False reflections	Biggest false signal, 20 dB smaller than the useful signal
Deviation with liquids	≤ 2 mm (meas. distance > 0.25 m/0.8202 ft)
Non-repeatability[8]	≤ 2 mm

[7] The values for SV, TV and QV can be assigned as required.
[8] Already included in the meas. deviation

MAN 1000057629 EN Version: B Status: RL (released | freigegeben) printed: 26.06.2026

1052384-EN-250701

Deviation with bulk solids	The values depend to a great extent on the application. Binding specifications are thus not possible.

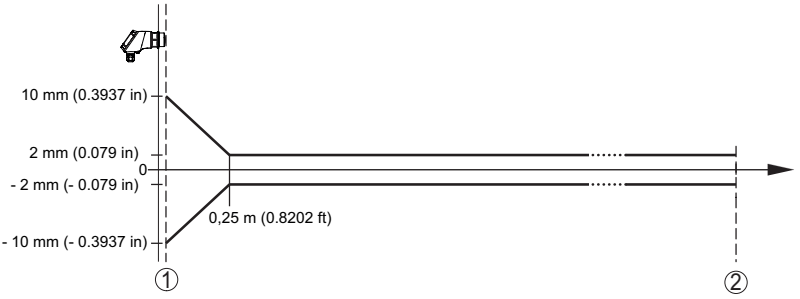

Fig. 25: Deviation under reference conditions[9)]

1 Antenna edge, reference plane
2 Recommended measuring range

Variables influencing measurement accuracy[10)]	
Specifications apply to the digital measured value	
Temperature drift	< 3 mm/10 K, max. 5 mm
Additional deviation through electromagnetic interference	< ±10 mm[11)]
Specifications apply also to the current output	
Temperature drift	< 0.03 %/10 K or max. 0.3 % relating to the 16.7 mA span
Deviation in the current output due to digital/analogue conversion	< 15 µA
Additional measurement deviation through electromagnetic interference	< 80 µA[12)]
For sensors with ship approval[13)]	< 250 µA

Characteristics and performance data	
Radar signal	FMCW (Frequency-Modulated-Continuous-Wave)
Measuring frequency	W-band (80 GHz technology)
Measuring cycle time[14)]	≤ 250 ms
Step response time[15)]	≤ 3 s

[9)] In case of deviations from reference conditions, the offset due to installation can be up to ± 4 mm. This offset can be compensated by the adjustment.
[10)] Determination of the temperature drift acc. to the limit point method
[11)] The specified measurement deviation of ±10 mm due to electromagnetic interference is used as test criteria for the EMC immunity tests and is therefore to be understood as maximum value.
[12)] The specified measurement deviation of ± 80 µA due to electromagnetic interference is used as test criteria for the EMC immunity tests and is therefore to be understood as maximum value.
[13)] According to IACS E10 (shipbuilding)/IEC 60945
[14)] With operating voltage $U_B \geq 24$ V DC
[15)] Time span after a sudden distance change from 1 m to 5 m until the output signal reaches 90 % of the final value for the first time (IEC 61298-2). Valid with operating voltage $U_B \geq 24$ V DC.

MAN 1000067029 EN Version: BStatus: RL (released | freigegeben) printed: 26.06.2026

Beam angle[16]	8°
Emitted HF power (depending on the parameter setting)[17]	
– Average spectral transmission power density	-3 dBm/MHz EIRP
– Max. spectral transmission power density	+34 dBm/50 MHz EIRP
– Max. power density at a distance of 1 m	< 3 µW/cm²

Ambient conditions	
Ambient temperature device	-40 … +70 °C (-40 … +158 °F)
Storage and transport temperature	-40 … +80 °C (-40 … +176 °F)

Mechanical environmental conditions	
Vibrations (oscillations)	Class 4M8 acc. to IEC 60721-3-4 (5 g, 4 … 200 Hz)
Impacts (mechanical shock)	Class 6M4 acc. to IEC 60721-3-6 (50 g; 2.3 ms)
Impact resistance	IK07 acc. to IEC 62262

Process conditions

For the process conditions, please also note the specifications on the type label. The lowest value (amount) always applies.

Process temperature	-40 … +80 °C (-40 … +176 °F)
Process pressure	-1 … 3 bar (-100 … 200 kPa/-14.5 … 43.51 psig)

Electromechanical data	
Cable entry	
– Options	M20 x 1.5; ½ NPT
– Cable gland	M20 x 1.5 (cable diameter 5 … 9 mm)
– Closing cap	½ NPT
Wire cross-section (spring-loaded terminals)	
– Massive wire, stranded wire	0.2 mm² (AWG 24) … 2.5 mm² (AWG 14)
– Stranded wire with end sleeve	0.2 mm² (AWG 24) … 1.5 mm² (AWG 16)

Bluetooth interface	
Bluetooth standard	Bluetooth 5.0
Frequency	2.402 … 2.480 GHz
Max. emitted power	+2.2 dBm
Max. number of participants	1
Effective range	typically 25 m (82 ft)[18]

[16] Outside the specified beam angle, the energy level of the radar signal is 50% (-3 dB) less.
[17] EIRP: Equivalent Isotropic Radiated Power
[18] Depending on the local conditions

MAN 1000057623 EN Version: R Status: RL (released | freigegeben) printed: 26.06.2026

1052384-EN-250701

Adjustment	
Smartphone/Tablet	Adjustment app
Voltage supply	
Operating voltage U_B	
– at 4 mA	12 … 35 V DC
– at 20 mA	9 … 35 V DC
Reverse voltage protection	Integrated
Permissible residual ripple	
– for 12 V < U_B < 18 V	≤ 0.7 V_{eff} (16 … 400 Hz)
– for 18 V < U_B < 35 V	≤ 1 V_{eff} (16 … 400 Hz)
Load resistor	
– Calculation	(U_B - U_{min})/0.022 A
– Example - U_B= 24 V DC	(24 V - 12 V)/0.022 A = 545 Ω
Overvoltage protection	
Dielectric strength against metallic mounting parts	> 10 kV
Overvoltage resistance (test impulse voltages 1.2/50 µs at 42 Ω)	> 1000 V
Additional overvoltage arrester	Due to the floating structure of the electronics and comprehensive insulation measures generally not necessary.
Electrical protective measures	
Potential separation	Electronics potential free up to 500 V AC
Protection rating	IP66/IP67 acc. to IEC 60529
	Type 4X acc. to UL 50
Altitude above sea level	5000 m (16404 ft)
Protection class	III
Pollution degree	4

MAN 1000065621 EN Version: B Status: RL (released | freigegeben) printed: 26.06.2026

12.2 Dimensions

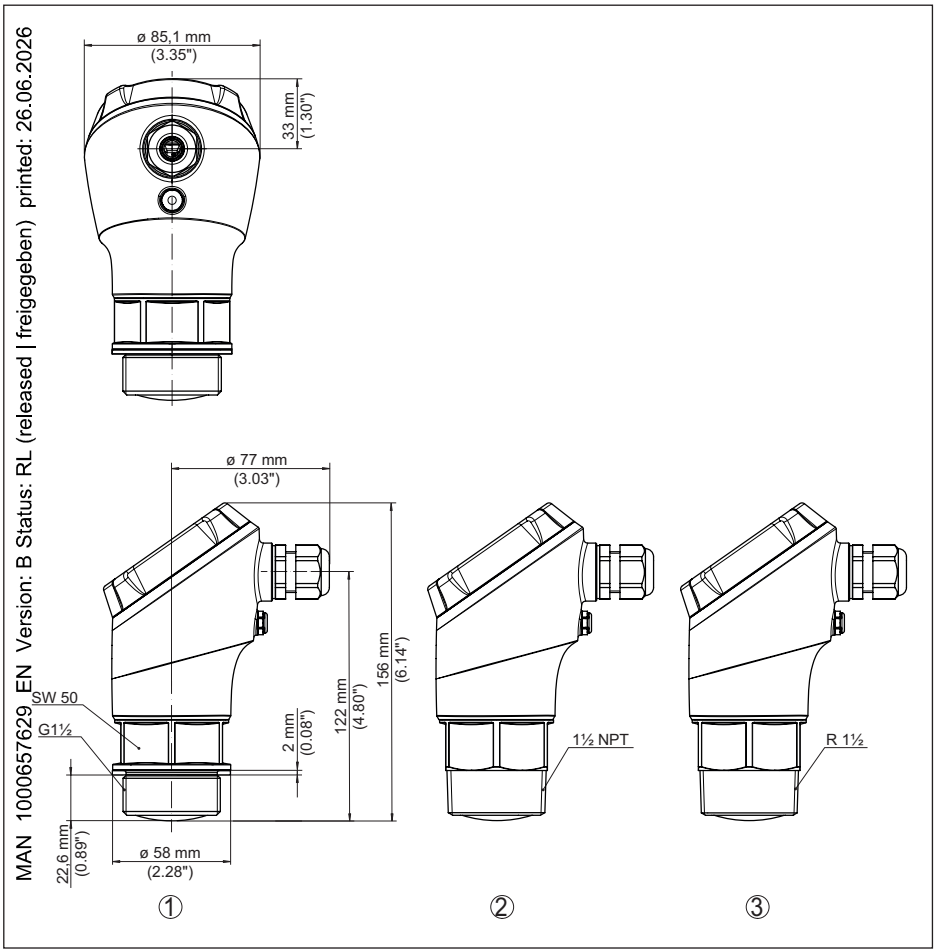

Fig. 26: Dimensions LEVEL TRANSMITTER 8131 – 20 m

1 Thread G1½
2 Thread 1½ NPT
3 Thread R1½

12.3 Licensing information for open source software

Open source software components are also used in this device. A documentation of these components with the respective license type, the associated license texts, copyright notes and disclaimers can be found on our homepage.

12.4 Trademark

All the brands as well as trade and company names used are property of their lawful proprietor/originator.

MAN 1000657629 EN Version: B Status: RL (released | freigegeben) printed: 26.06.2026

1052384-EN-250701

MAN 1000657629 EN Version: B Status: RL (released | freigegeben) printed: 26.06.2026

1052384-EN-250701

MAN 1000657629 EN Version: B Status: RL (released | freigegeben) printed: 26.06.2026

1052384-EN-250701

MAN 1000657629 EN Version: B Status: RL (released | freigegeben) printed: 26.06.2026

The smart choice
of Fluid Control Systems
www.burkert.com

bürkert
FLUID CONTROL SYSTEMS

1052384-EN-250701