bürkert
FLUID CONTROL SYSTEMS

Digital electropneumatic positioner for the integrated mounting on process control valves

- Compact, robust stainless steel design
- Start-up by automatic TUNE-Function
- Contact-free position sensor
- Integrated control air routing
- Digital communication IO-Link, Bürkert system bus (büS)

Product variants described in the data sheet may differ from the product presentation and description.

Can be combined with

Type 2301 ▸
Pneumatically operated 2-way Globe Control Valve

Type 2300 ▸
Pneumatically operated 2-way angle seat control valve ELEMENT

Type 2103 ▸
2/2-way diaphragm valve with pneumatic stainless steel actuator (Type ELEMENT) for decentralised automation

Hygienic process control valves

Type description

Compact positioner for integrated mounting on pneumatically operated process valves. Remote setpoint adjustment via a 4 - 20 mA signal. A contact-free continuous sensor measures the position of the valve spindle. Simple installation through automatic TUNE-Function and setting through DIP-switch: Close tight function, Characteristic curves selection, Reversal of effective direction, Switching manual /automatic operation, Binary input. A software interface can be used for, amongst others, linearisation of the operation characteristics by using free programmable fixed points. The valve position indication is shown through LED components. As an option an analogue position feedback can be integrated.

DTS 1000110889 EN Version: S Status: RL (released | freigegeben | validé) printed: 20.02.2023

© Christian Bürkert GmbH & Co. KG, Subject to alteration

Visit product website ▸

Table of contents

1. General technical data 3

1.1. Digital electropneumatic positioner Type 8696 ... 3
1.2. Without fieldbus communication ... 4
1.3. With digital communication: IO-Link ... 5
1.4. With digital communication: Bürkert system bus (büS) ... 5

2. Materials 5

2.1. Material specifications ... 5

3. Dimensions 6

3.1. Mounting on control valve ELEMENT Type 23xx / 2103 ... 6
3.2. Mounting on hygienic process valves of third party suppliers ... 6

4. Device/Process connections 7

4.1. Electrical connections ... 7
Without fieldbus communication 24 V DC ... 7
IO-Link connection ... 7
Bürkert system bus (büS) connection ... 8

5. Performance specifications 8

5.1. Signal flow diagram ... 8
Position control loop ... 8
Additional software functions of the TopControl Type 8696 ... 8
5.2. Interface diagram ... 9
TopControl Positioner BASIC ... 9

6. Product installation 10

6.1. Combination options with pneumatic process valves ... 10

7. Ordering information 11

7.1. Bürkert eShop – Easy ordering and quick delivery ... 11
7.2. Bürkert product filter ... 11
7.3. Ordering chart ... 11
7.4. Ordering chart Accessories ... 12
Standard Accessories ... 12
Adapter kits ... 12

DTS 1000110889 EN Version: S Status: RL (released | freigegeben | validé) printed: 20.02.2023

1. General technical data

1.1. Digital electropneumatic positioner Type 8696

Product properties	
Dimensions	Detailed information can be found in chapter "3. Dimensions" on page 6.
Material	
Body	PPS, Stainless steel
Seal	EPDM
Cover	PC
Operation	
Operating keys	2
DIP switch	Integrated (only for 24 V DC version without digital communication)
Service-interface	Connection with PC via USB connection
Configuration tool	Bürkert Communicator PACTware (only for 24 V DC device version with serial interface)
Commissioning	
Initialization positioner	Automatic by X.TUNE function (automatic adjustment of the positioner)
Manual override pilot valve	In manual mode via operating keys
Status display	
Display of device and valve status	Multicoloured LEDs
Communication	
Digital	IO-Link, Bürkert system bus (based on CANopen)
Performance data	
Position sensor	
Measuring principle	Inductive
Position detection module	Contactless (wear-free) analogue position sensor
Stroke range	
Valve spindle	3…32 mm
Electrical data	
Operating voltage	24 V DC ±25 % UL: NEC Class 2
Residual ripple	max. 10 %
Power consumption	≤3.5 W
Protection class	3 acc. to DIN EN 61140
Electrical connection	
Multipole version	M12, 8- resp. 5-pin acc. to device version (see "4. Device/Process connections" on page 7)
Pneumatic data	
Control medium	Neutral gases, air, quality class acc. to ISO 8573–1
Dust content	Class 7 (<40 µm particle size)
Particle density	Class 5 (<10 mg/m³)
Pressure dew point	Class 3 (<-20 °C)
Oil content	Class X (<25 mg/ m³)
Supply pressure	0…7 bar[1.)]
Pilot air port	Threaded connection G ⅛, stainless steel
Positioning system	
Low air capacity	
Single-acting	7 l_N/min for aeration and ventilation (Q_{Nn} value acc. to definition at pressure drop from 7 to 6 bar absolute)
Actuator series/size	Type 23xx, Ø actuator 50 mm Type 2103, Ø actuator 50 mm
Approvals and certificates	
Conformity	EMC directive 2014/30/EU
Ignition protection	II 3D Ex tc IIIC T135 °C Dc II 3G Ex ec IIC T4 Gc
UL	cULus certificate: E238179

DTS 1000110889 EN Version: S Status: RL (released | freigegeben | validé) printed: 20.02.2023

ATEX	II 3D Ex tc IIIC T135 °C Dc II 3G Ex ec IIC T4 Gc Certificate: BVS 14 ATEX E 008 X
IECEx	Ex tc IIIC T135 °C Dc Ex ec IIC T4 Gc Certificate: IECEx BVS 14.0009 X
CCC (China Compulsory Certificate)	For devices with Ex approval
Environment and installation	
Operating conditions	
Ambient temperature	-10…+55 °C
Degree of protection	IP65/IP67 acc. to EN 60529, 4X acc. to NEMA 250 Standard
Operating altitude	2000 m above see level
Installation and mechanical data	
Installation variant	Direct mounting
Installation position	As required, preferably with actuator in upright position
Valve actuator (type, size)	ELEMENT actuator series Type 23xx/2103, actuator size 50 mm and third-party actuators
Adapter kit	Detailed information can be found in chapter “Adapter kits” on page 12.

1.2. Without fieldbus communication

Electrical data	
Operating voltage	24 V DC ±25 %
Residual ripple	Max. 10 %
Protection class	III acc. to DIN EN 61140
Input/Output	
Digital input	1 digital input, 0…5 V = log “0", 10…30 V = log “1”
Analogue output	1 output (optional) 0/4…20 mA
Input data setpoint	
Setpoint signal	
Set-point value setting default	4…20 mA (0…20 mA adjustable via configuration software)
Input resistance	0/4…20 mA: 75 Ω

DTS 1000110889 EN Version: S Status: RL (released | freigegeben | validé) printed: 20.02.2023

1.3. With digital communication: IO-Link

Electrical data	
IO-Link specification	V1.1.2
SIO-Mode	No
VendorID	0x0078, 120
DeviceID	See IODD file (The IODD file can be downloaded from our **website** ▶, see Software > Device Description Files A.04)
Transmission rate	230.4 kbit/s (COM 3)
Data storage	Yes
Max. cable length	20 m
Port class	A and B
Electrical connection	M12 × 1, 5-pin, A-coded
Power supply	Via IO-Link
Port Class A	
Operating voltage	24 V DC ± 25 % (according to specification)
Current consumption	max. 150 mA
Port Class B	
Operating voltage	
System supply (Pin 1 + 3)	24 V DC ± 25 % (according to specification)
Actuator supply (Pin 2 + 5)	24 V DC ± 25 % (gemäß Spezifikation)
Current consumption	
System supply (Pin 1 + 3)	max. 50 mA
Actuator supply (Pin 2 + 5)	max. 120 mA

1.4. With digital communication: Bürkert system bus (büS)

Electrical data	
Operating voltage	18…30 V DC (acc. to Specification)
Electrical connection	M12 × 1, 5-pin, A-coded
Current consumption	Max. 150 mA

2. Materials

2.1. Material specifications

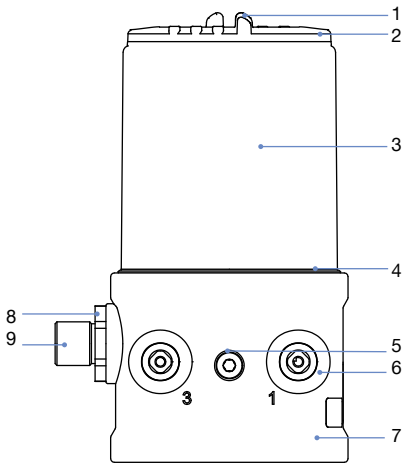

No.	Element	Material
1	Cover	PC
2	Seal	EPDM
3	Body casing	Stainless steel
4	Seal	EPDM
5	Screws	Stainless steel
6	Push-in connector Threaded ports G ⅛	POM/Stainless steel Stainless steel
7	Basic housing	PPS
8	Screws	Stainless steel
9	Plug connector M12	Stainless steel

DTS 1000110889 EN Version: S Status: RL (released | freigegeben | validé) printed: 20.02.2023

3. Dimensions

3.1. Mounting on control valve ELEMENT Type 23xx / 2103

Note:

- Internal control air supply to the actuator
- Dimensions in mm

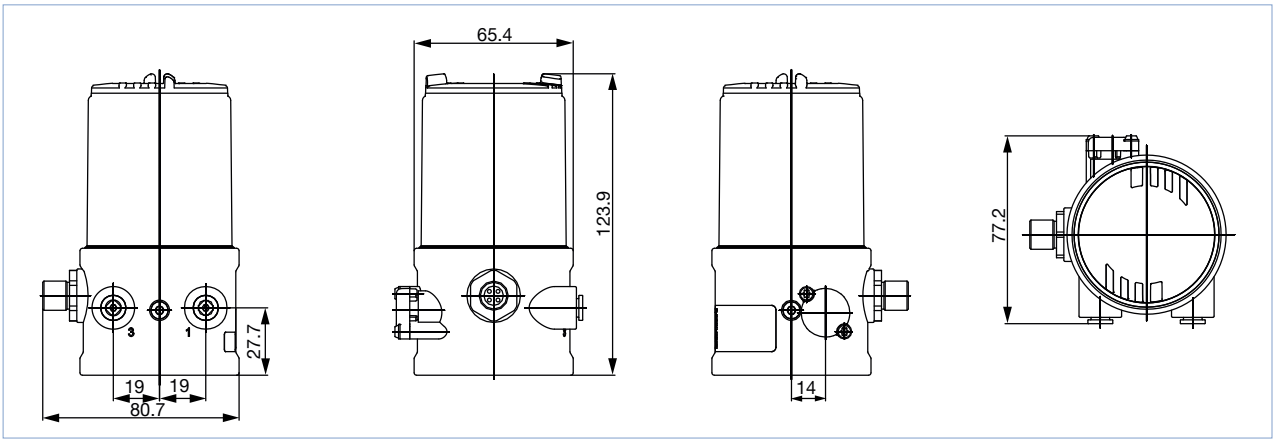

3.2. Mounting on hygienic process valves of third party suppliers

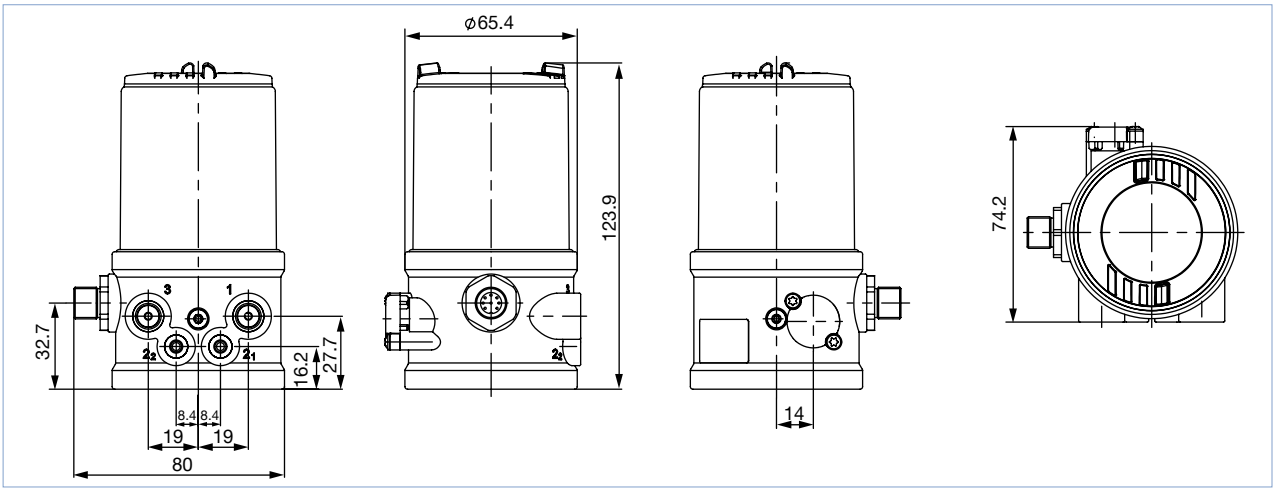

DTS 1000110889 EN Version: S Status: RL (released | freigegeben | validé) printed: 20.02.2023

4. Device/Process connections

4.1. Electrical connections

Without fieldbus communication 24 V DC

Circular plug M12, 8-pin

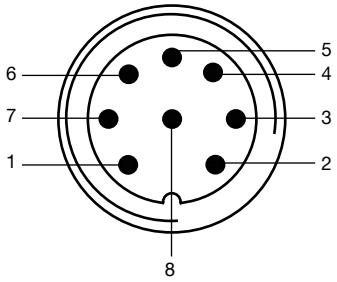

Pin	Pin assignment
1	Setpoint + (0/4…20 mA / 0…5/10 V)
2	Setpoint GND
3	Operating voltage GND
4	Operating voltage +24 V DC
5	Digital input +
6	Digital input GND
7	Analogue position feedback GND
8	Analogue position feedback +

IO-Link connection

M12 circular plug, 5-pin, Port Class A

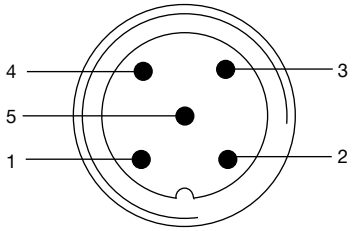

Pin	Description	Pin assignment	
1	L +	24 V DC	System supply
2	I/Q	NC	Not connected
3	L -	0 V (GND)	System supply
4	C/Q	IO-Link	Communication
5	NC	NC	Not connected

M12 circular plug, 5-pin, Port Class B

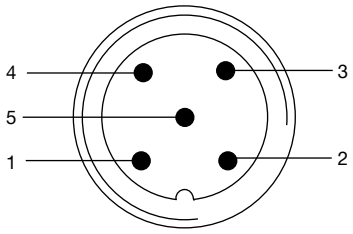

Pin	Description	Pin assignment	
1	L +	24 V DC	System supply
2	P24	24 V DC	Actuator supply
3	L -	0 V (GND)	System supply
4	C/Q	IO-Link	Communication
5	N24	0 V (GND)	Actuator supply

DTS 1000110889 EN Version: S Status: RL (released | freigegeben | validé) printed: 20.02.2023

Bürkert system bus (büS) connection

Circular plug M12, 5-pin	
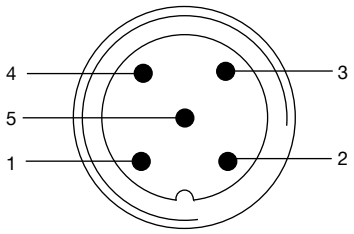	

Pin	Description	Cable colour
1	CAN Shield/Shielding	CAN Shield/Shielding
2	+24 V DC ±25 %, max. residual ripple 10 %	Red
3	GND / CAN_GND	Black
4	CAN_H	White
5	CAN_L	Blue

5. Performance specifications

5.1. Signal flow diagram

Position control loop

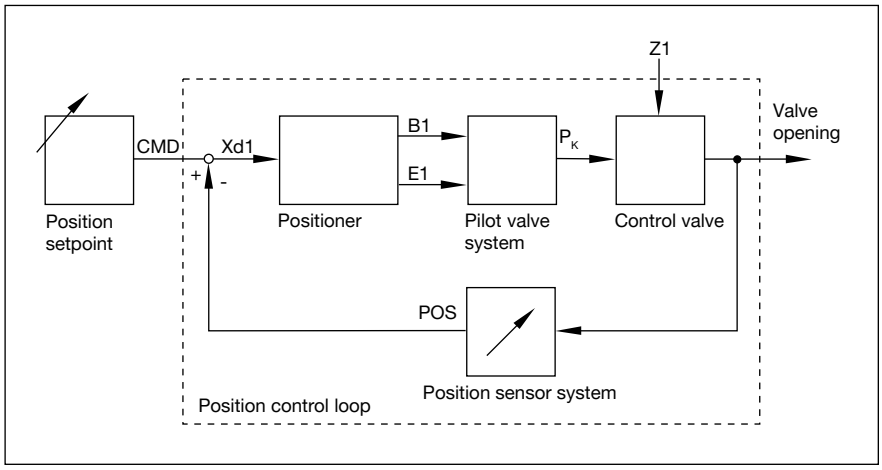

Additional software functions of the TopControl Type 8696

TopControl BASIC functions

- Automatic start of the control system
- Digital input (safety position)
- Analogue position feedback (optional)

DIP-Switch activated device

- Close-tight function
- Inversion of the operating direction of the setpoint signal
- Linear characteristic curves selection or customised programming (software interface)
- Manual and automatic operation

Communications software with activatable and parameter driven functions

- Customised programming transmission characteristics
- Choices of setpoint signal
- Range splitting setpoint signal
- Limitation of the valve stroke
- Limitation of the operation speed.
- Definition of the safety position
- Signal failure detection

DTS 1000110889 EN Version: S Status: RL (released | freigegeben | validé) printed: 20.02.2023

5.2. Interface diagram

TopControl Positioner BASIC

Without fieldbus communication 24 V DC

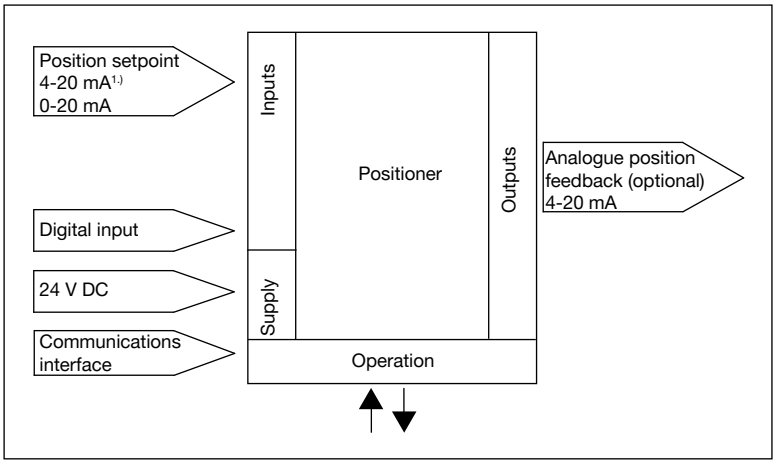

1.) Default setting

With digital communication IO-Link, Bürkert system bus (büS)

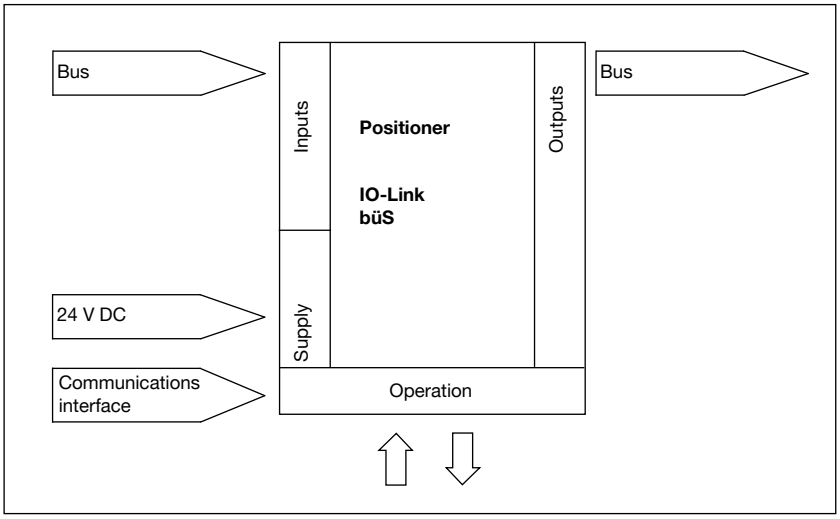

DTS 1000110889 EN Version: S Status: RL (released | freigegeben | validé) printed: 20.02.2023

6. Product installation

6.1. Combination options with pneumatic process valves

Note:
A TopControl control valve system consists of a **Positioner BASIC Type 8691** and a **Control valve ELEMENT Type 23xx** respectively **2103**, actuator size 50 mm.

The following information is required to select a complete system:

- **Article no.** of the desired positioners TopControl BASIC **Type 8696**
- **Article no.** of the desired control valves **Type 23xx/2103** (see separate data sheets, **Type 2301** ▶, **Type 2300** ▶, **Type 2103** ▶)

You order two components and receive a complete assembled and certified valve.

Example for decentralised automation of On/Off ELEMENT valve systems

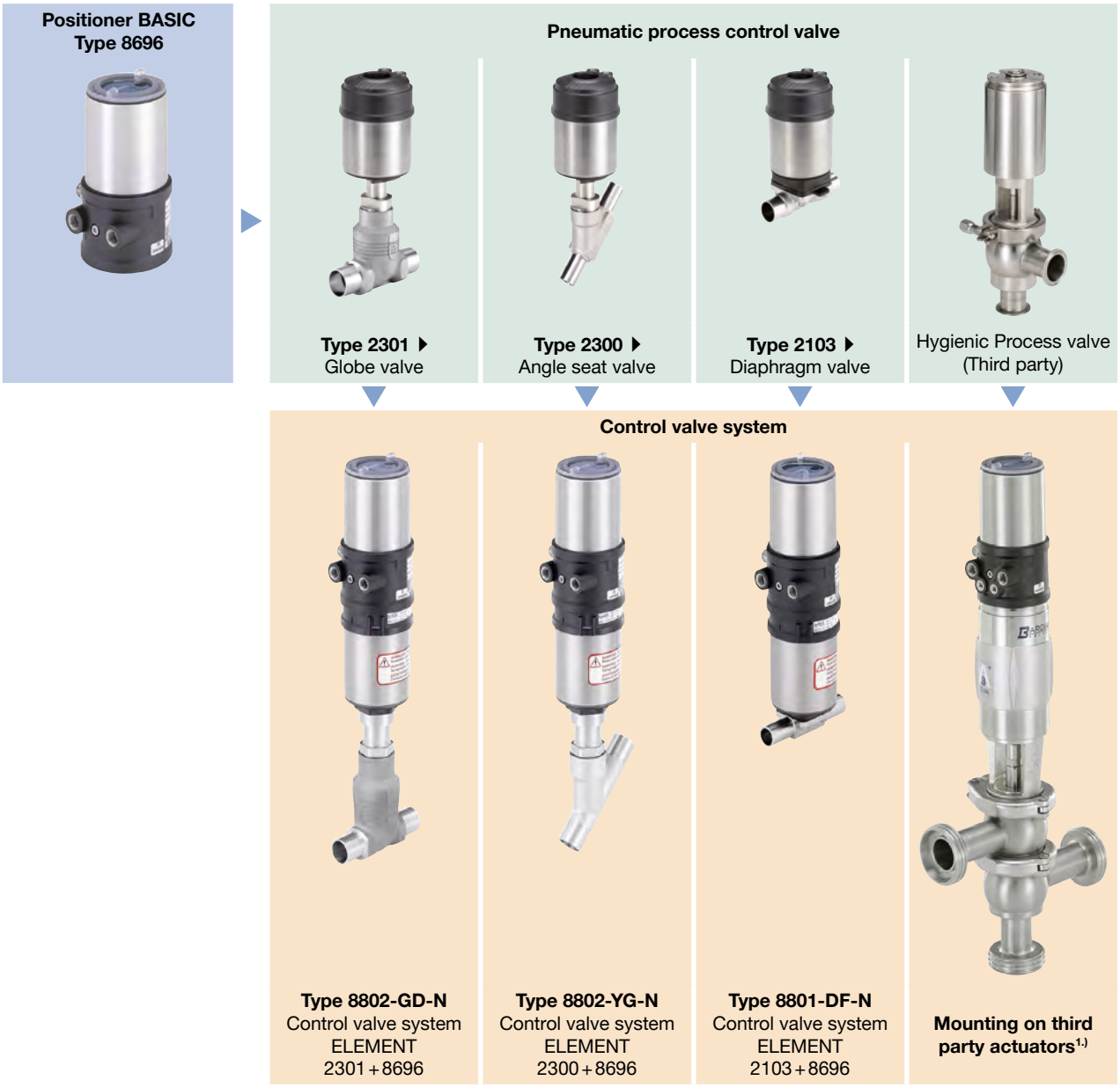

1.) See data sheet **adaptations for third-party actuators, KK01** ▶ or contact the appropriate Bürkert sales office.

DTS 1000110889 EN Version: S Status: RL (released | freigegeben | validé) printed: 20.02.2023

7. Ordering information

7.1. Bürkert eShop – Easy ordering and quick delivery

Bürkert eShop – Easy ordering and quick delivery

You want to find your desired Bürkert product or spare part quickly and order directly? Our online shop is available for you 24/7. Sign up and enjoy all the benefits.

Order online now

7.2. Bürkert product filter

Bürkert product filter – Get quickly to the right product

You want to select products comfortably based on your technical requirements? Use the Bürkert product filter and find suitable articles for your application quickly and easily.

Try out our product filter

7.3. Ordering chart

Note:

- Adapter kits must be ordered separately - see “Adapter kits” on page 12.
- All standard versions are UL approved.
- Other versions are available on request.

Circuit function pilot valve system	Electrical connection	Communication	Analogue feedback	Digital input	Pilot air ports threaded connection	Article no.	
Actuator series ELEMENT Type 23xx/2103 with actuator size Ø 50 mm (internal control air routing)						**Standard**	**ATEX II Cat. 3G/D, IECEx, CCC[1.)]**
Single-acting	M12 plug connector	Without fieldbus communication	–	Yes	G ⅛	326436	265082
			Yes	Yes	G ⅛	326437	265083
		IO-Link Port Class A	–	–	G ⅛	20032474	20032476
		IO-Link Port Class B	–	–	G ⅛	326447	On request
		Bürkert system bus (büS)	–	–	G ⅛	326445	On request

DTS 1000110889 EN Version: S Status: RL (released | freigegeben | validé) printed: 20.02.2023

Mounting on external drives (external control air routing)							
Single-acting	M12 plug connector	Without fieldbus communication	–	Yes	G ⅛	326434	265084
			Yes	Yes	G ⅛	326435	265085
		IO-Link Port Class A	–	–	G ⅛	20032473	20032475
		IO-Link Port Class B	–	–	G ⅛	326446	On request
		Bürkert system bus (büS)	–	–	G ⅛	326444	On request

1.) CCC (China Compulsory Certificate) for device versions with Ex approval.

7.4. Ordering chart Accessories

Standard Accessories

Description	Article no.
M12 socket, 8-pin with 5 m cable for input and output signals	919267
Silencer G ⅛	780779
Silencer, push-in connector	902662
USB interface for serial communication (only for 24 V DC version with serial interface without digital communication)	227093
USB büS interface set (büS stick + connecting cable with M12 connector + connecting cable M12 to micro USB for büS service interface) for connecting to the PC tool Bürkert Communicator	772551
büS cable extension M12, length 1 m	772404
büS cable extension M12, length 3 m	772405
büS cable extension M12, length 5 m	772406
büS cable extension M12, length 10 m	772407
Sensor puck (spare part)	677245
Software Bürkert Communicator	**LINK**

Adapter kits

Adapter kits for third-party actuators can be found in the data sheet **Adaptation for third-party actuators, KK01** or contact the appropriate Bürkert sales office.

Description	Actuator size	Control function	Article no.
Adapter kit ELEMENT Types 23xx/2100	Ø 50 mm	Universal	679918

DTS 1000110889 EN Version: S Status: RL (released | freigegeben | validé) printed: 20.02.2023

Bürkert – Close to You

For up-to-date addresses
please visit us at
www.burkert.com

DTS 1000110889 EN Version: S Status: RL (released | freigegeben | validé) printed: 20.02.2023

Credits, © and concept: Christian Bürkert GmbH & Co. KG | Photographs: Marc Eggimann Fotografie - 4051 Basel | Scanner GmbH - Werbeagentur Künzelsau - 74653 Künzelsau